Redundanz-Protokolle für hochverfügbare Automatisierungsnetze

KBC Forum 2022 - BäderParkHotel Fulda

Guido Hahnloser

27.09.2022

Agenda

- **Standardized vs Proprietary**
- **Two Stages of Redundancy**
- **Layer 2 Redundancy**
- **Mixing Technologies**
- **The Next Generation**

Standardised vs Proprietary Technology

- Standardized:
  - Works across manufacturers
  - Future-proof
  - Well understood
- Proprietary:
  - Covers special requirements
  - Sometimes better performance
  - Simple design, tailor-made for one application
  - But…

RSTP

MSTP

LACP

© Belden | belden.com

Layer 2 Redundancy:

	RSTP	MSTP	HIPER Ring	Fast HIPER Ring	MRP	Fast MRP	PRP HSR DLR	Link Backup	Link Aggre-gation	Link Aggregation over HIPER ring	Link Aggregation over MRP (HiOS-2A)	Loop-protection/ -prevention	FuseNet Subring Manager	FuseNet Ring-, Network-coupling	FuseNet Ring Coupling Protocol
RS2 xx/xx	●		●		●									●	
RS20-L2B/RSB	●		●		●										
RS20/30/40 OCTOPUS OS20/30 Classic	●	●	●		●				● L2P					●	
MS20/30	●	●	●		●				● L2P					●	
MS2108/3124	●		●											●	
MS4128	●		●		●				●	● L2P	●		4	●	
MSP30	●	●	●		●			●	8	●			8	●	●
MSP40	●	●	●		●			●	8	●			12	●	●
MACH102/104	●	●	●		●				7				4 *MACH104	●	
MACH1000	●	●	●	●	●				●				4	●	
MACH1040	●	●	●	●	●				●				16	●	
RSR20/30	●	●	●	●	●				●				4	●	
Greyhound GRS1X20/30	●				●			●	●				2		
Greyhound GRS 1X42	●	●	●		●			●	8	● L2A, L3S	●	●	20	●	●
MACH4000	●	●	●		●				8 L2P	● L2P			8	●	
DRAGON MACH	●	●	●		●			●	●	●	●	●	20	●	●
Bobcat BRS	●		● L2S L2A		●			●	2	●	● max.2 LAGs à 4 links	● L2A	8 L2A	●	scheduled
RSP20/30 OCTOPUS OS20/24/30/34 HiOS	●	●	●		●		●	●	4	● L2A, L3S		● L2A	8 L2A	● L2A	● L2A
RSP25/35 RSPE35/37	●	●	●		●	●	●	●	4	● L2A, L3S	●	● L2A	8 L2A	● L2A	● L2A
RSPE30	●	●	●		●			●	4	● L2A, L3S	●	● L2A	8 L2A	● L2A	● L2A
RSPL20/30	●	●			●			●	●						
RSPS20/25	●				●	● *25	● *25	●	●						
RED25	●				●	●	●	●	●						
GECKO	●				MRP client										

Since v08.7

OCTOPUS: The hardware configuration must be choosen accordingly, as seamless redundancy requires a piece of hardware at the respective ports 1 and port 2

Since V5.0 --- HIPER-Ring (Ring Switch-only); L2A, L3S, L3A

Since V6.1 --- L2A, L3S, L3A

Classic switches don't support subring over LACP
HiOS switches devices (2A) support subring over LACP

Customer™ Innovation Center

© Belden | belden.com

Re-establishing Physical Communication

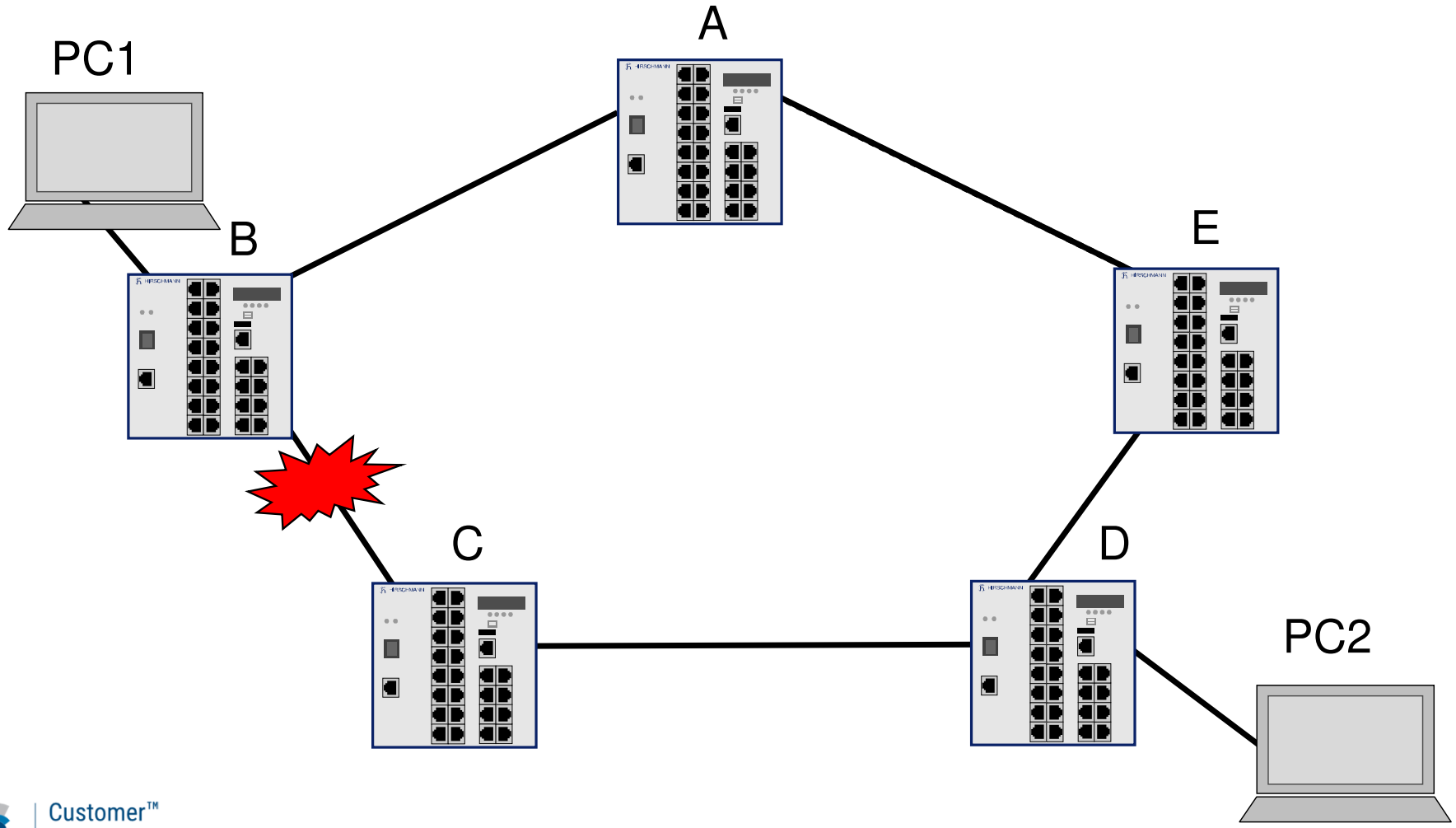

Re-establishing Logical Communication

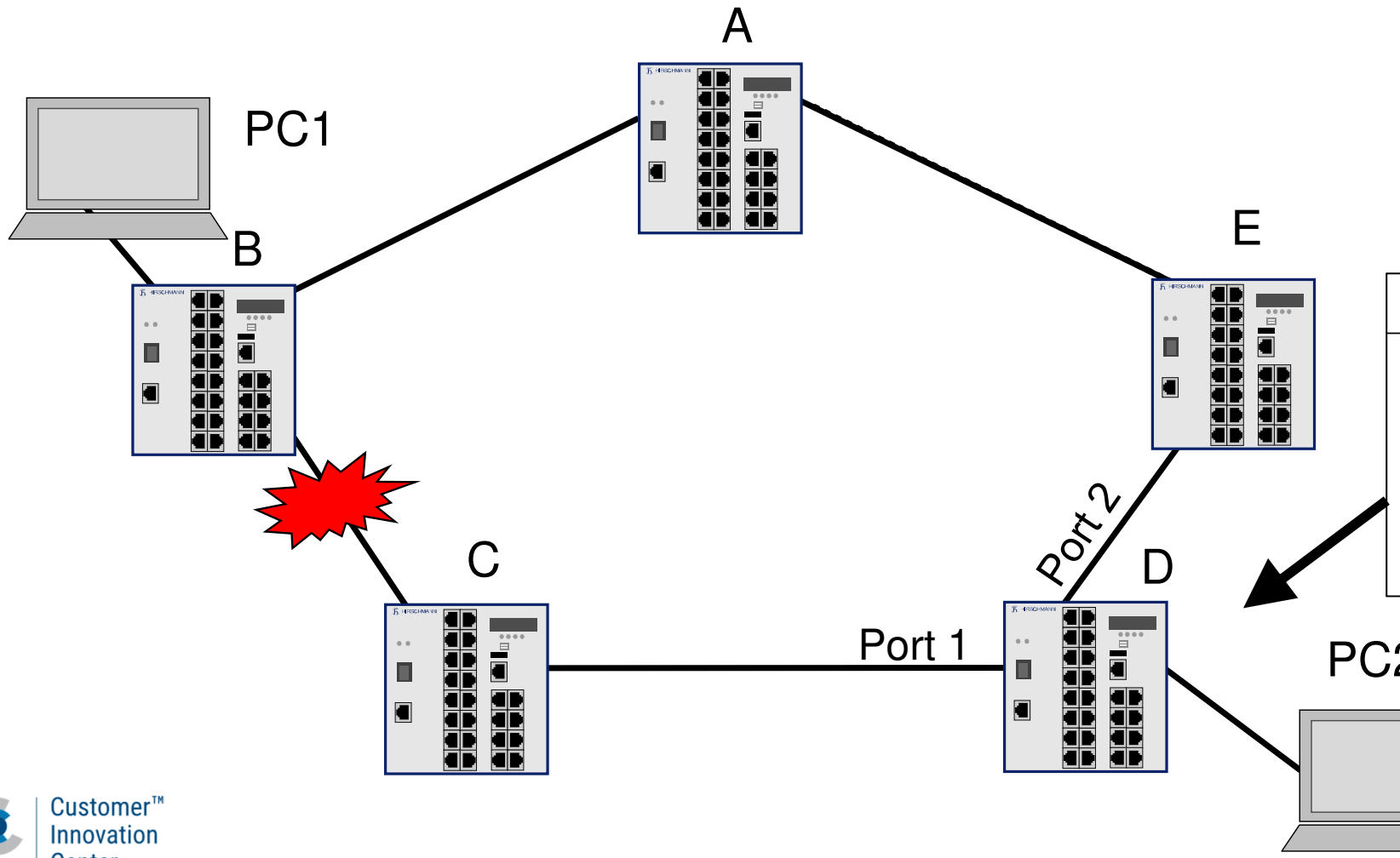

Learned Address Table

Switch “D”

Device	Path
~~PC1~~	~~Port 1~~
PC1	Port 2

Rapid Spanning Tree Protocol

Objective

- Resolve loops by creating a tree topology
- Prevent Broadcast storms

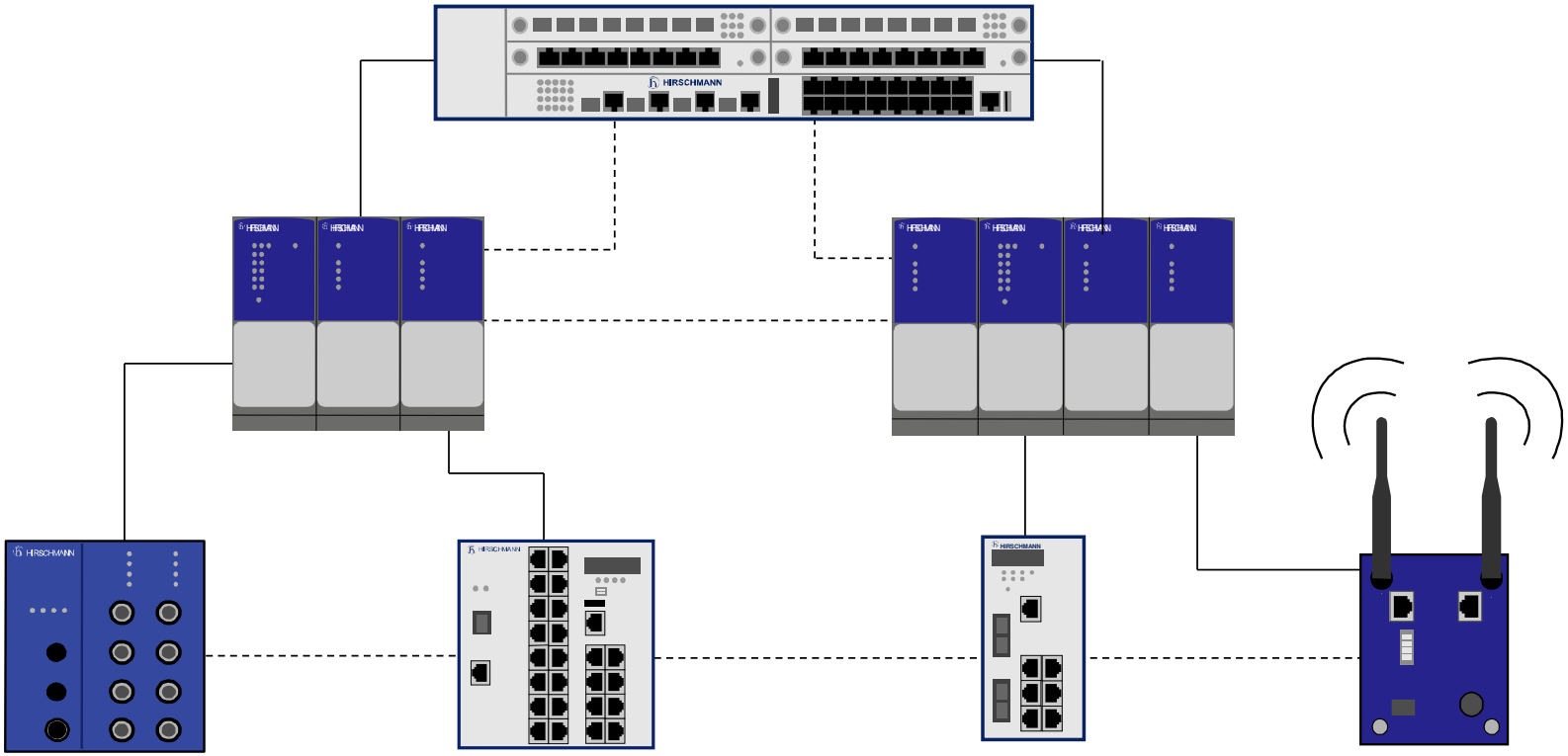

© Belden | belden.com

MRP and Fast MRP (Media Redundancy Protocol)

Objective

- Creation of a resilient ring structure

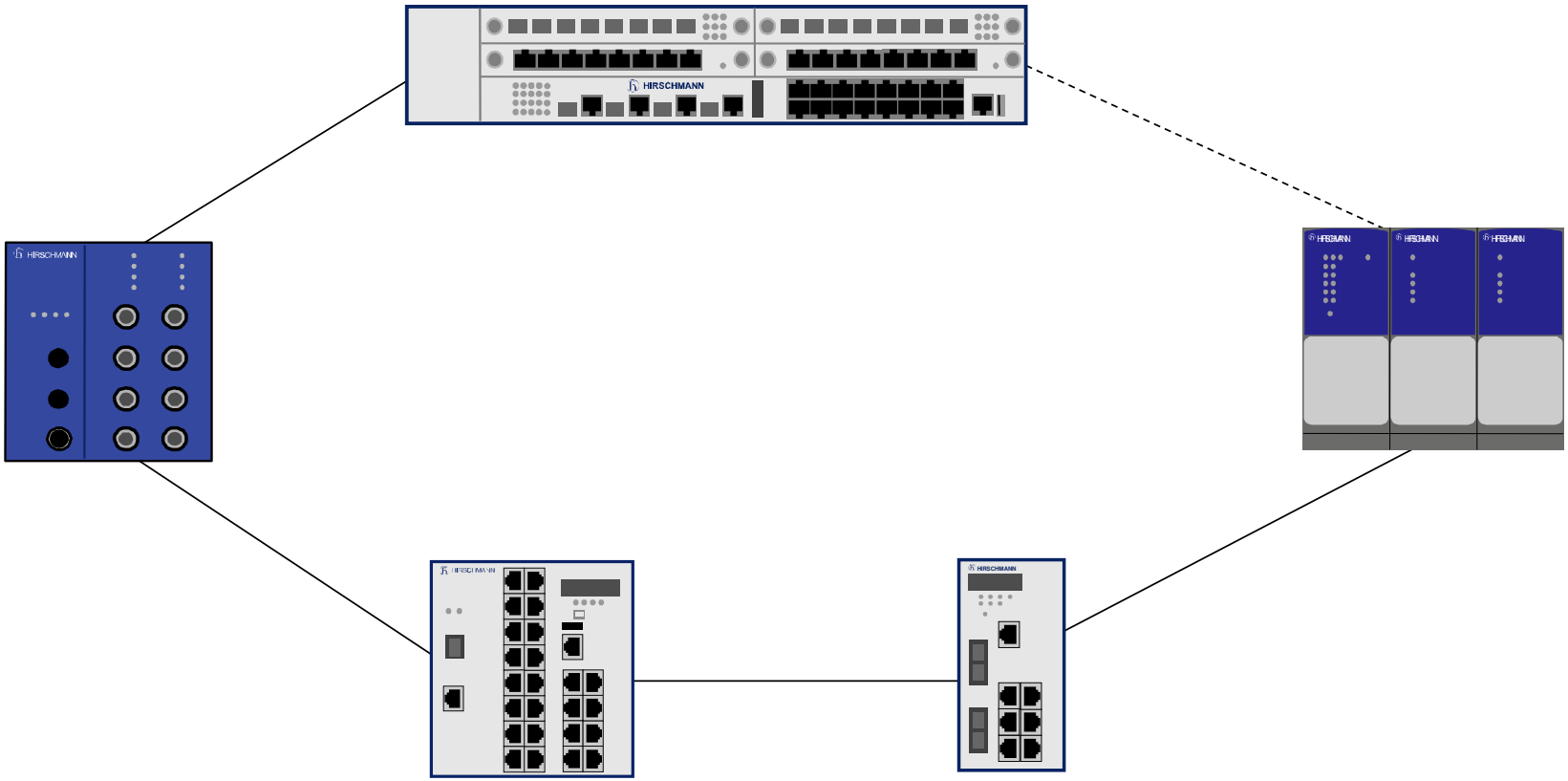

© Belden | belden.com

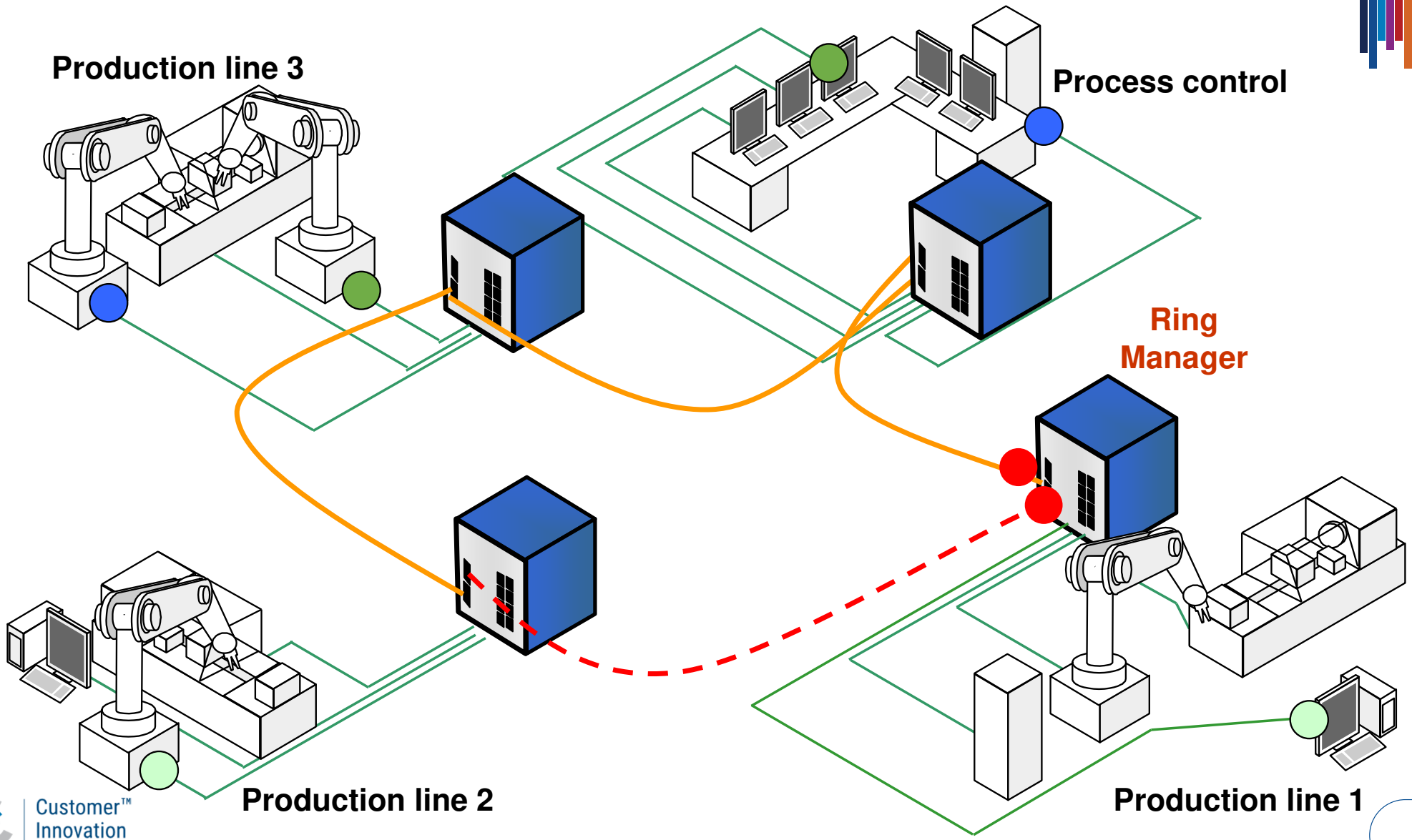
Production line 3
Process control
Ring
Manager
Production line 2
Production line 1

Subrings

Multiple instances with different partners

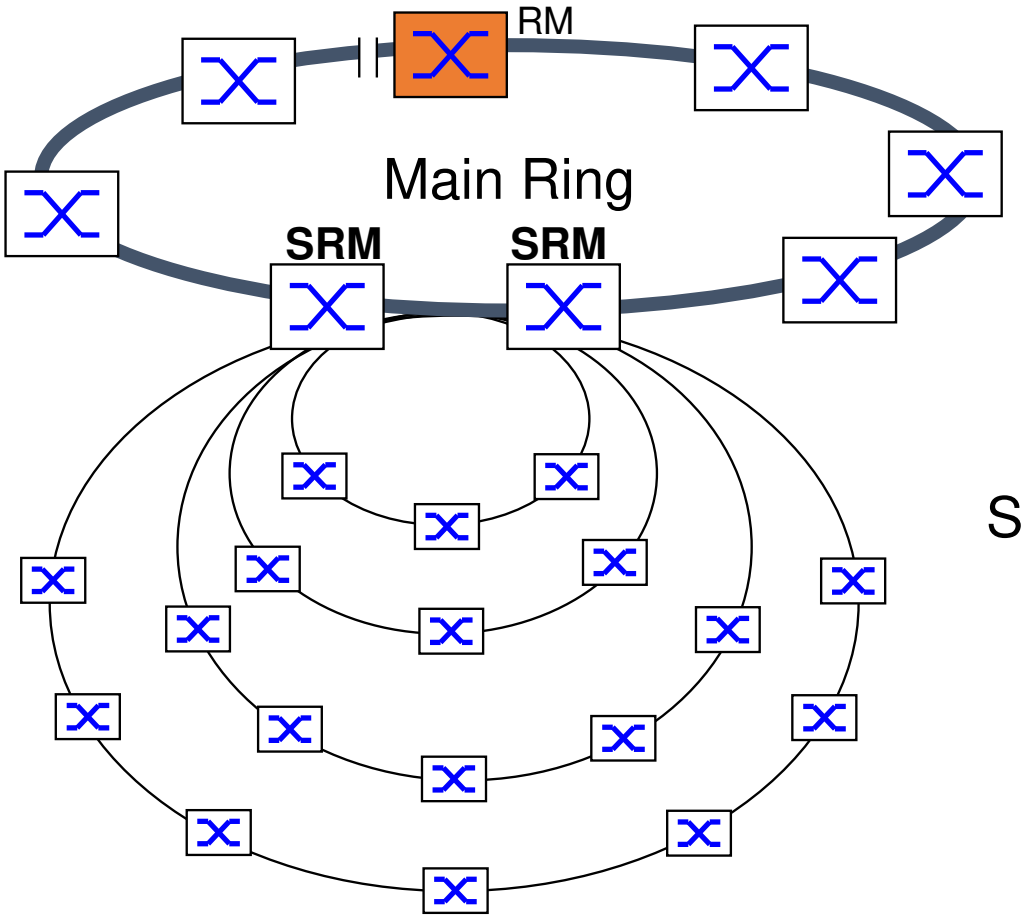

Subrings

Subrings

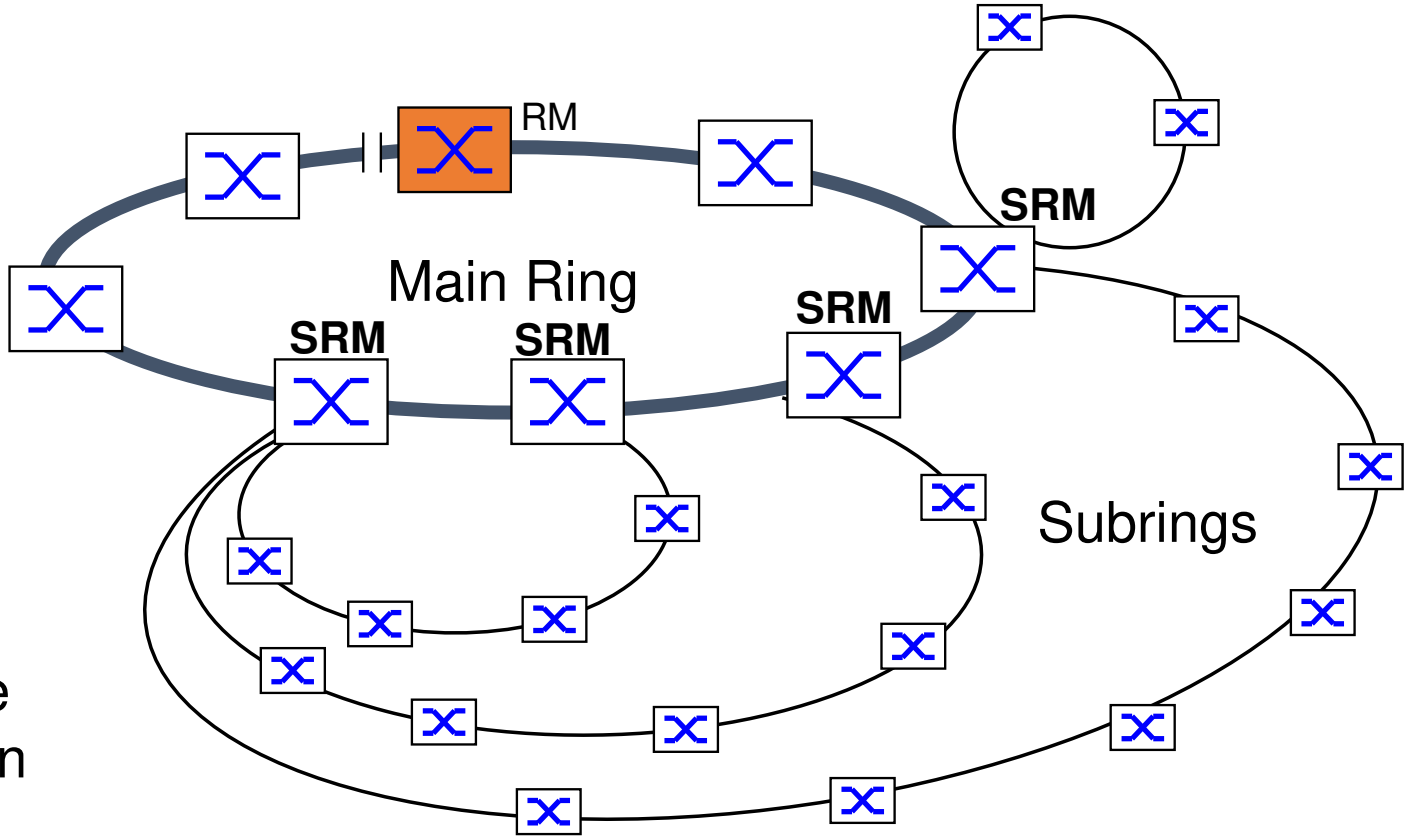

Multiple instances with different partners

HiOS 6.0 and above Link aggregation can be used in Subrings

Cascaded Subrings

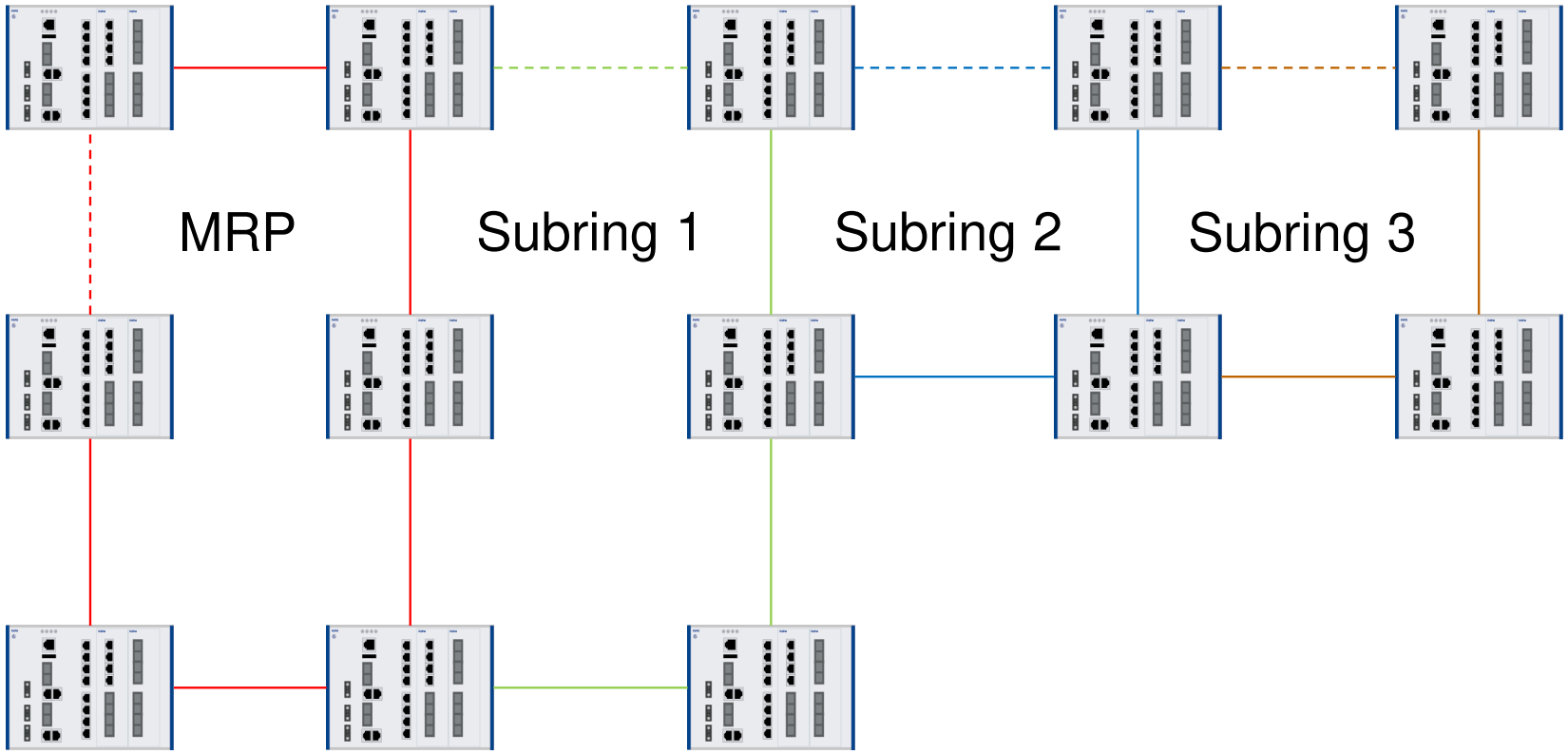

Cascaded Subrings

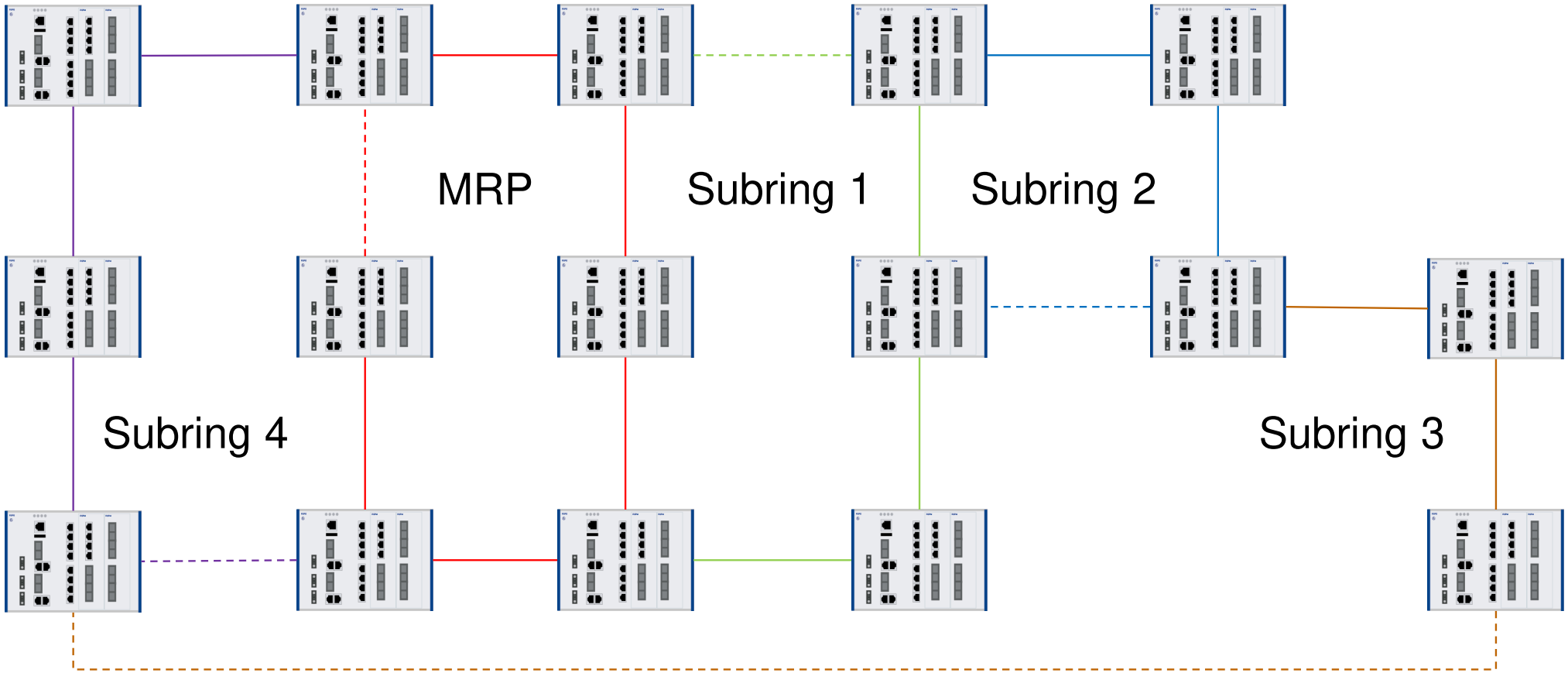

Subrings

- Subring is no standard MRP regarding recovery times!
  Typical / Max. recovery time: 40 ms / 300 ms
- Max. cascading depth is 5
- Recovery times for cascaded subrings are same as for subrings

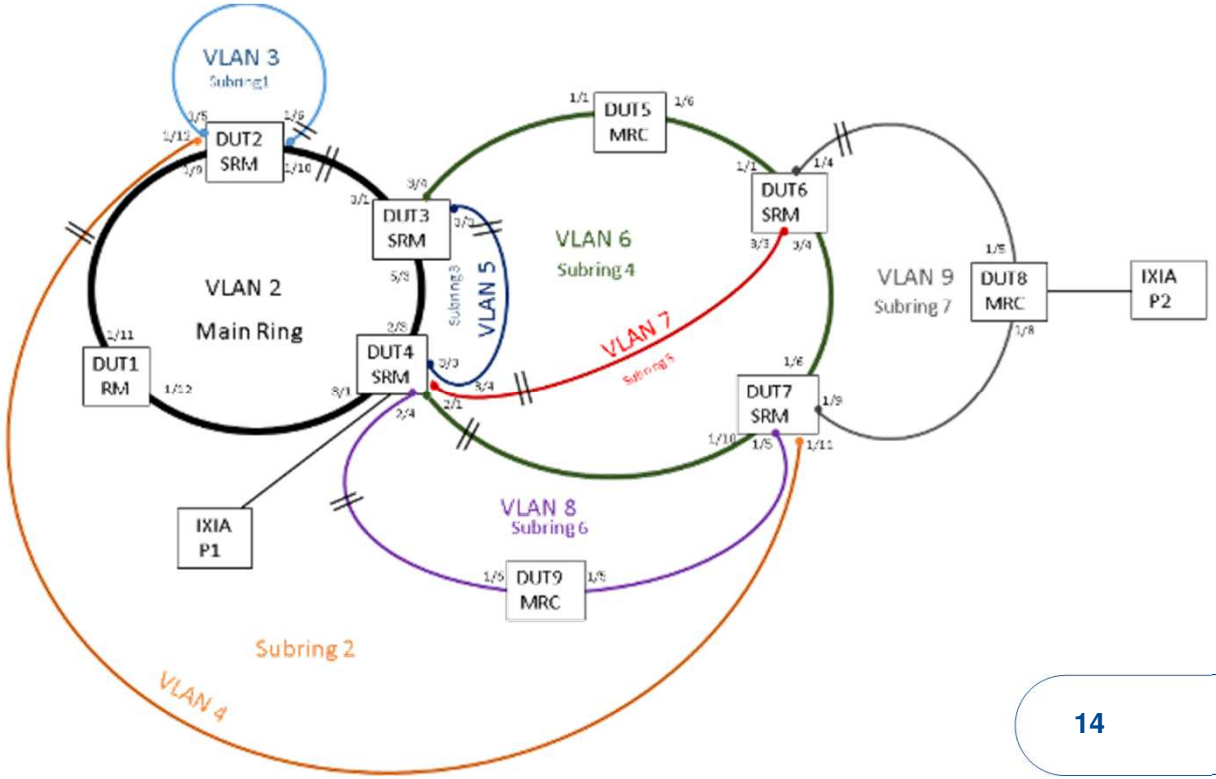

Ring Extension: Ring/Net Coupling

- Redundant Connection of Multiple Rings
- Allows redundant coupling of rings and network segments.
- Connection via two independent paths.

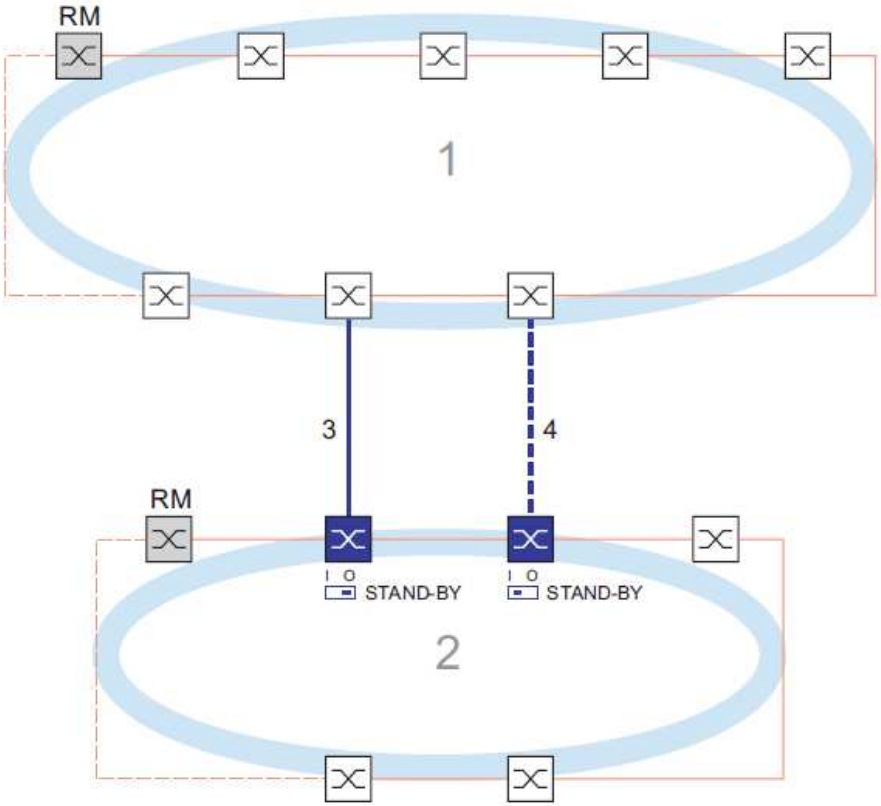

Figure 29: Example of two-Switch coupling
1: Backbone
2: Ring
3: Main line
4: Redundant line

Link-Aggregation (Trunking) – IEEE 802.3ad

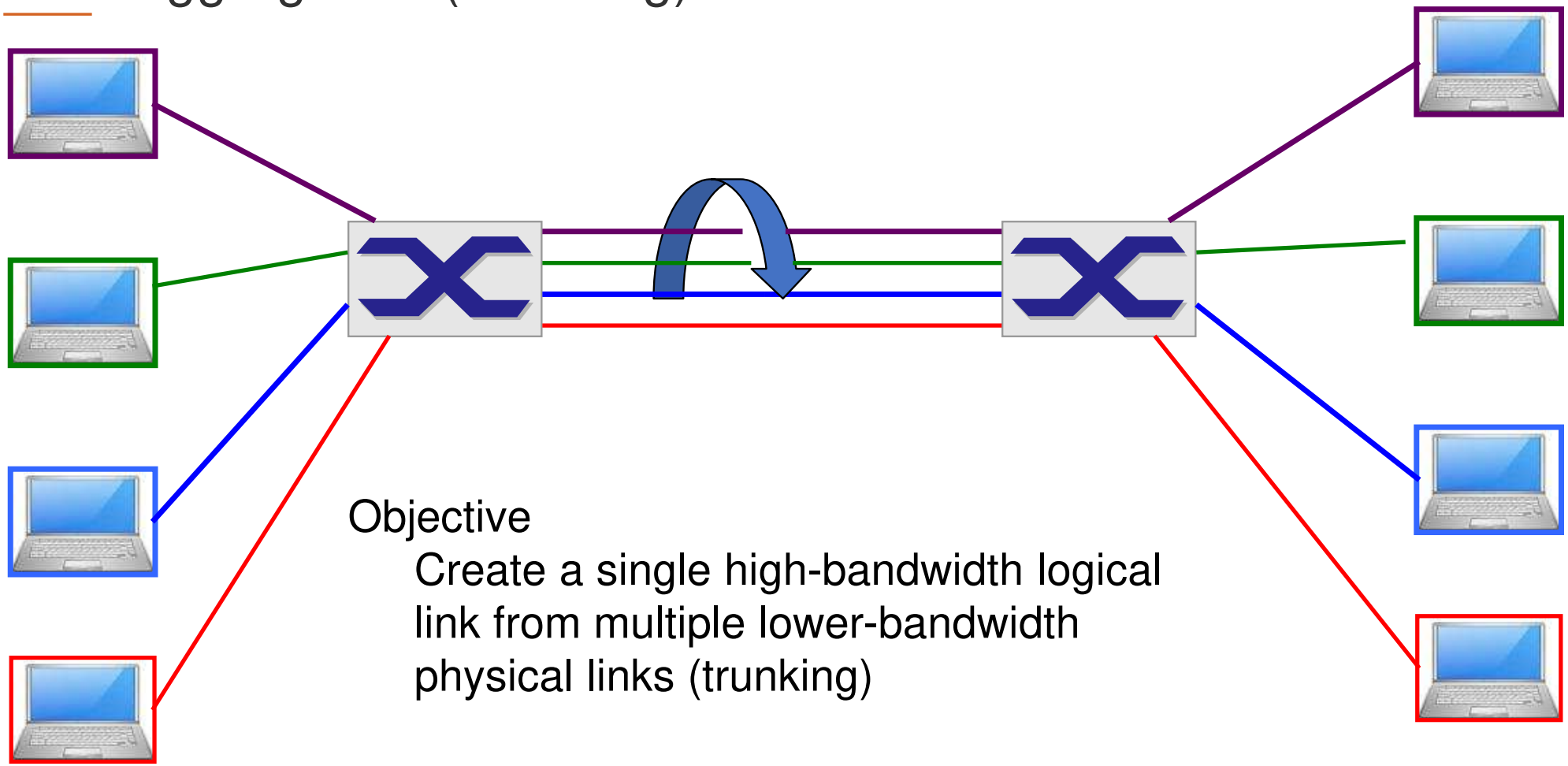

Objective

Create a single high-bandwidth logical link from multiple lower-bandwidth physical links (trunking)

© Belden | belden.com

Link Aggregation over MRP

5 Gig double ring:

- Bandwidth still close to the “real” application requirements
- Better reliability than single 10 Gig because of:
  - The combination of MRP and Link Aggregation
  - And the better 2.5 Gig SFP MTBF values in comparison to 10 Gig

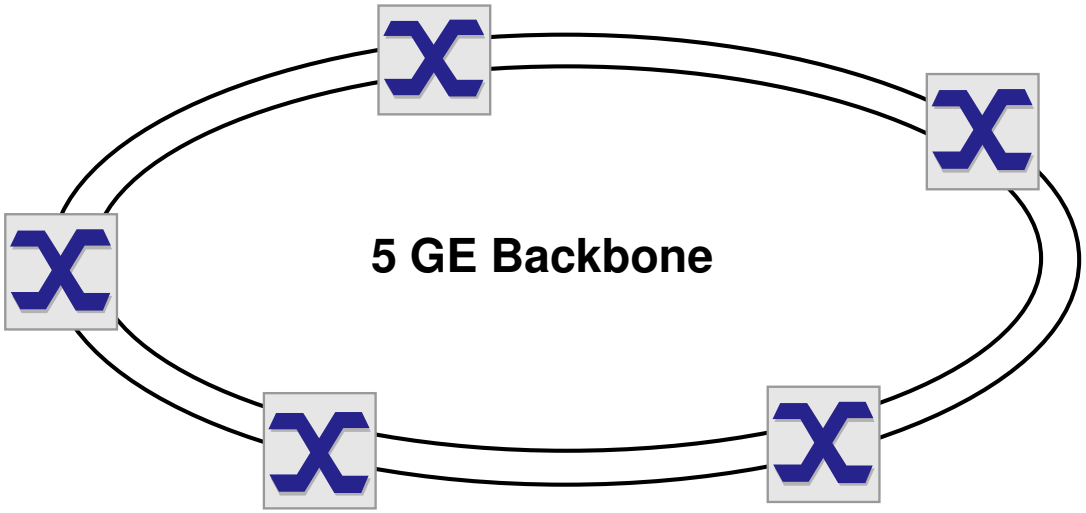

© Belden | belden.com

Mixing Proprietary and Standardized Technologies

- Avoid mixing standardized and proprietary redundancies
- Avoid combinations of redundancies (e.g. RSTP / MRP)
- Problem with resetting Learned Address Tables

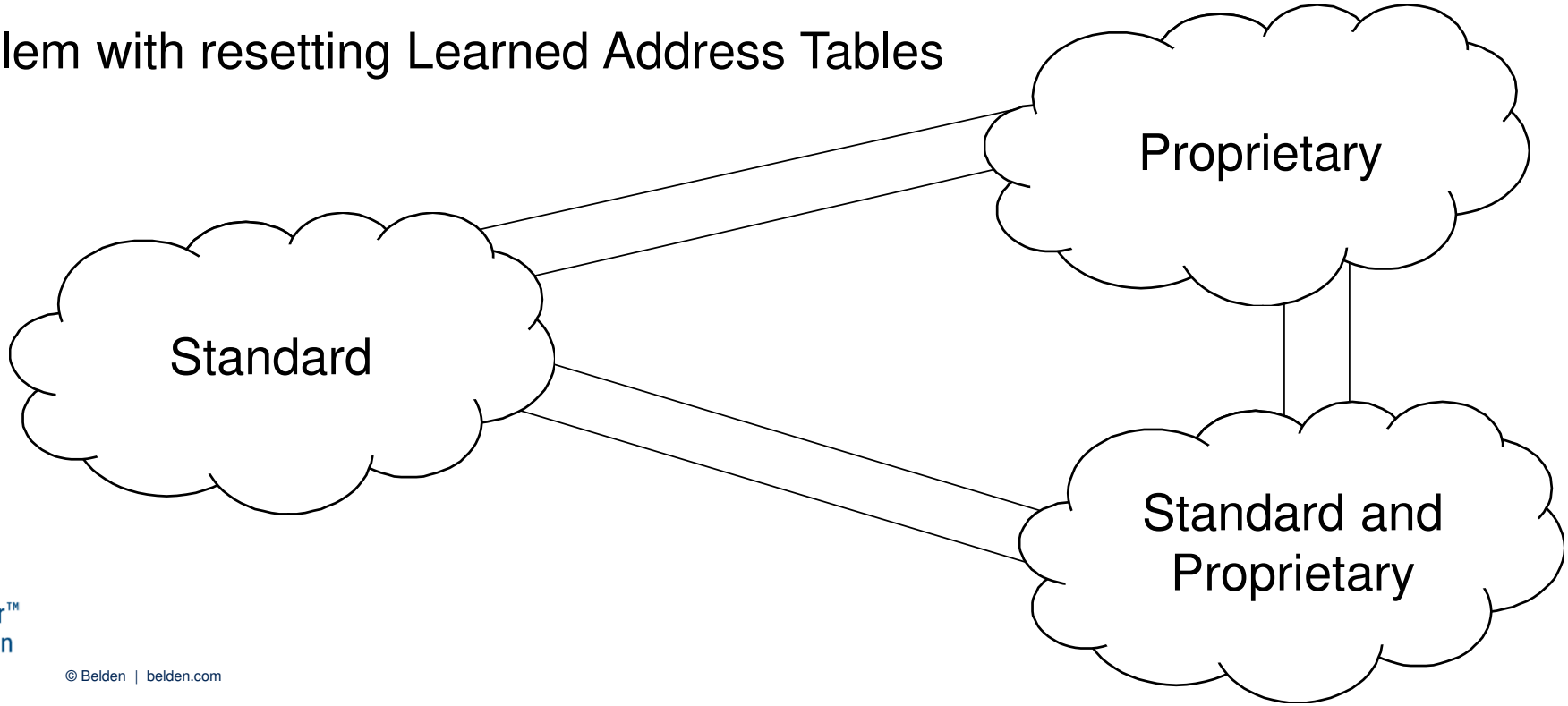

Redundant Coupling Protocol

Different Topologies with different protocols need to be connected

- Redundantly connects rings which are using different protocols
- Greatest flexibility when designing network topologies

What can connect with what

- RSTP, HIPER Ring, MRP (not Fast MRP), DLR

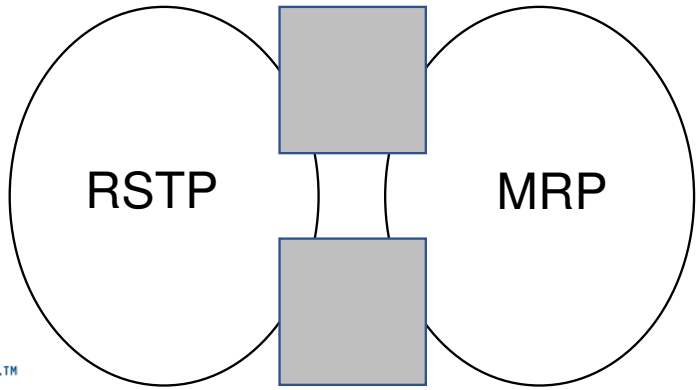

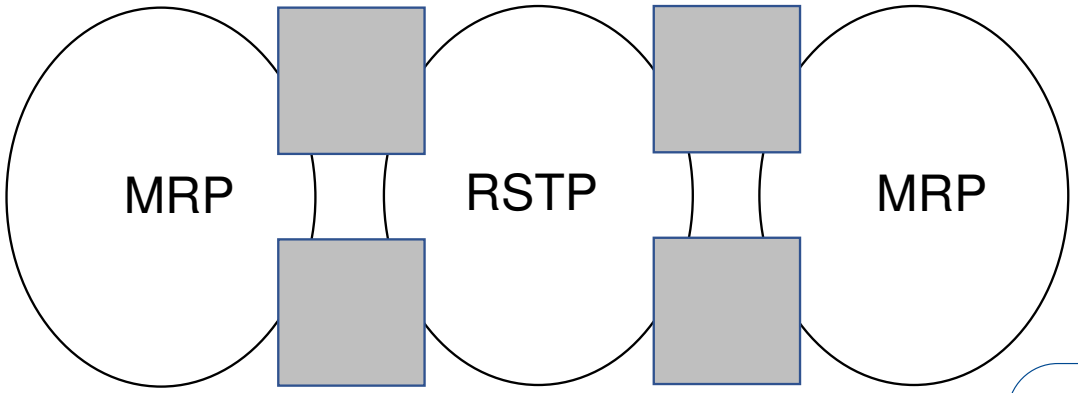

© Belden | belden.com

Highly Redundant Factory Network (IT/OT Convergence Example)

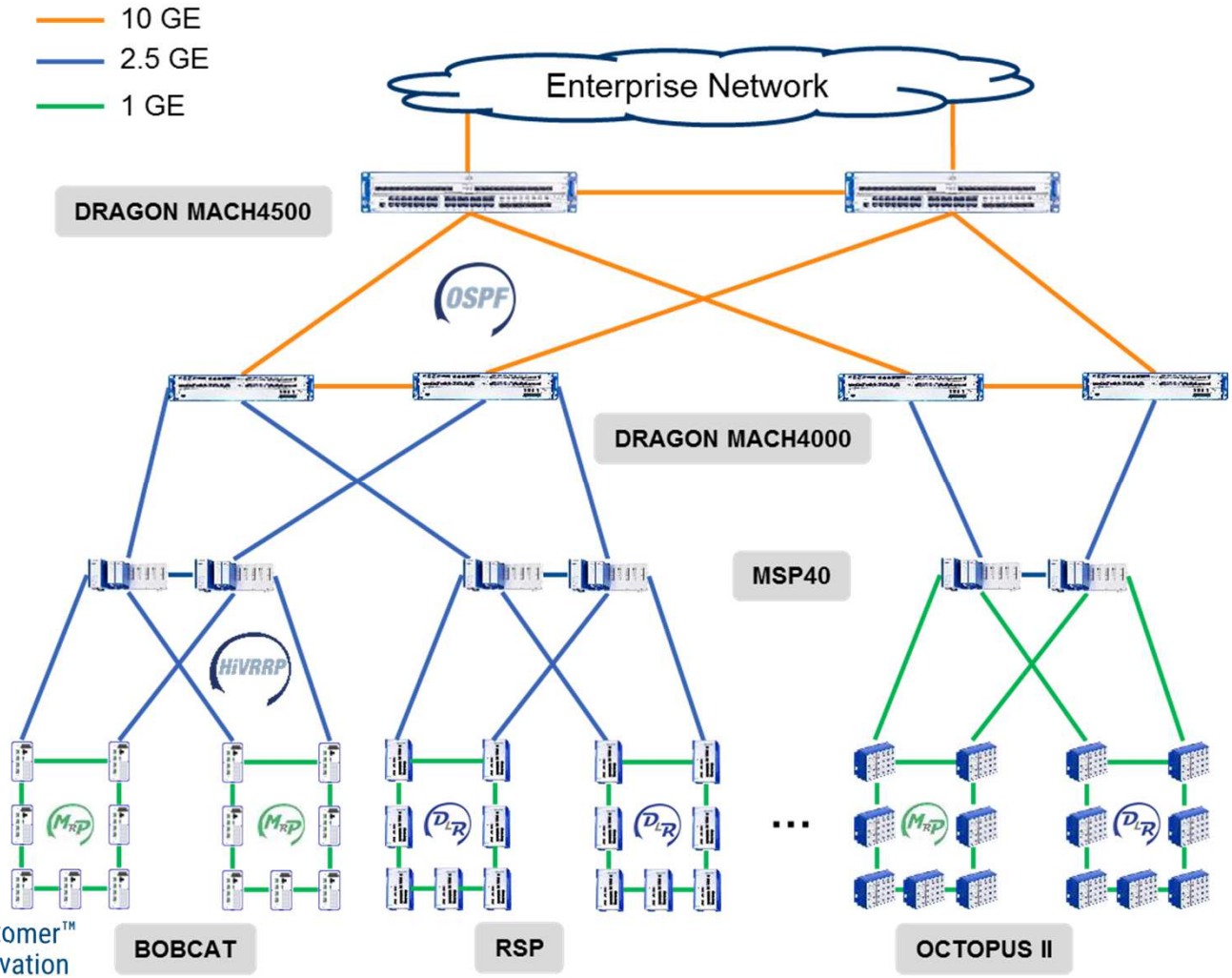

OSPF
Dynamical unicast routing protocol.

HiVRRP
HiVRRP extends the standardized VRRP (Virtual Router Redundancy Protocol) for faster recovery.

MRP
MRP is a protocol that allows you to set up high-availability, ring shaped network structures with recovery times of 500 ms, 200 ms, 30 ms or 10 ms

DLR
DLR provides high available networks in a ring topology. With a maximum of 50 nodes it is possible to achieve a worst case recovery time of 3 ms.

© Belden | belden.com

IEC 62439

IEC 62439 defines different redundancy protocols:

MRP, PRP/HSR, CRP, BRP, DRP

INCLUDED SUBPARTS

NOTE: The Contents of each subpart begins on page xxx3, so that the page numbering will be unchanged when the final International Standard is issued with its IEC-Central-Office-provided cover sheet.

IEC 62439-1 Ed1.0, Industrial communication networks high availability automation networks - Part 1: general concepts and calculation methods (Including RSTP) 1003

IEC 62439-2 Ed1.0, Industrial communication networks high availability automation networks - Part 2: Media Redundancy Protocol (MRP) 2003

IEC 62439-3 Ed1.0, Industrial communication networks high availability automation networks - Part 3: Parallel Redundancy Protocol (PRP) and High availability Seamless Ring (HSR) 3003

IEC 62439-4 Ed1.0, Industrial communication networks high availability automation networks - Part 4: Cross-network Redundancy Protocol (CRP) 4003

IEC 62439-5 Ed1.0, Industrial communication networks high availability automation networks - Part 5: Beacon Redundancy Protocol (BRP) 5003

IEC 62439-6 Ed1.0, Industrial communication networks high availability automation networks - Part 6: Distributed Redundancy Protocol (DRP) 6003

IEC 62439

INTERNATIONAL STANDARD

High availability automation networks

XJ

IEC62439 Redundancy MRP, Fast MRP, RSTP

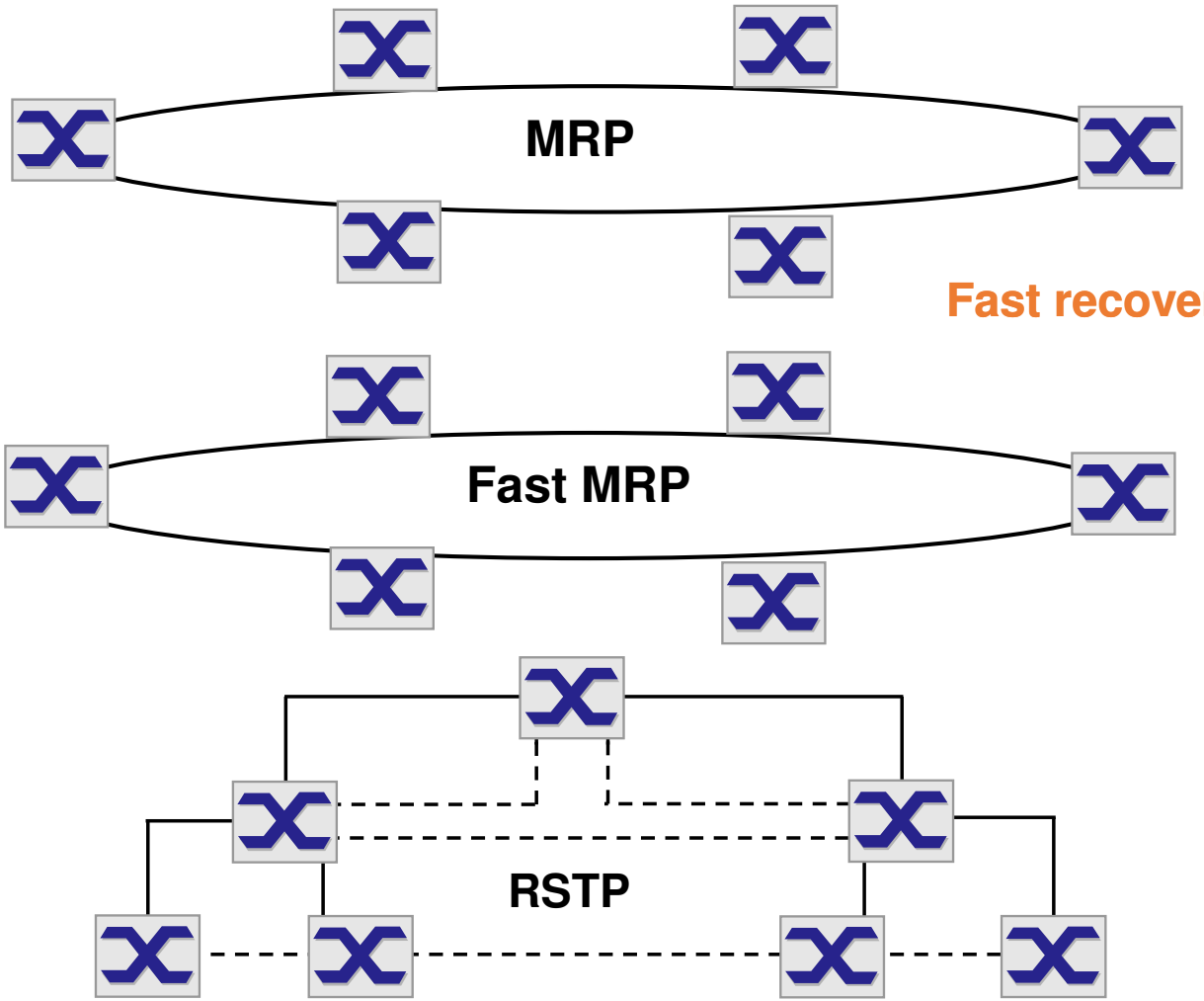

200ms
optimized 80ms

Fast recovery times

10ms

5-20ms per hop

© Belden | belden.com

IEC62439 Redundancy – PRP (Parallel Redundancy Protocol)

"0ms" Recovery – Duplicate Networks

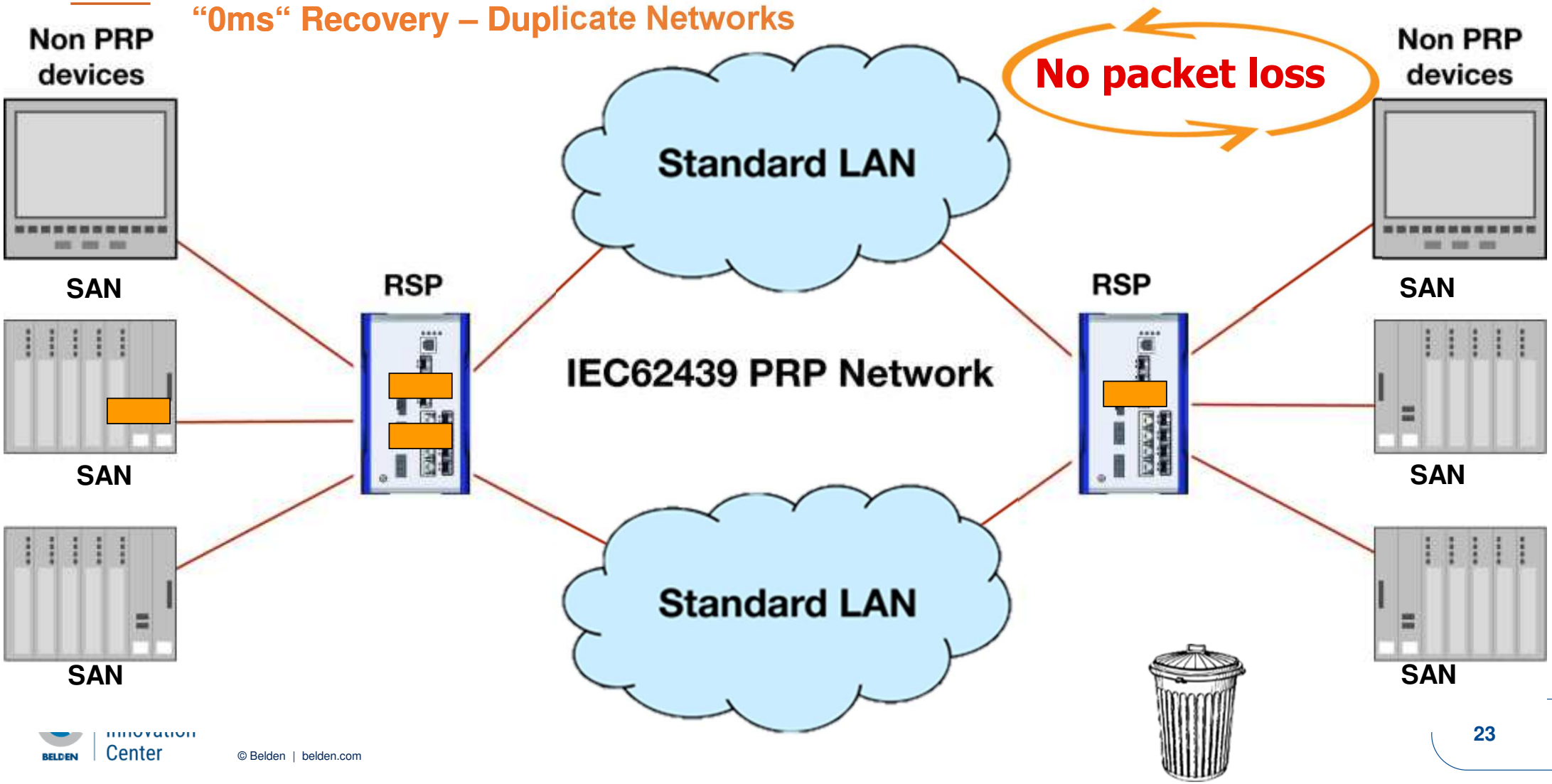

IEC62439 Redundancy – PRP (Parallel Redundancy Protocol)

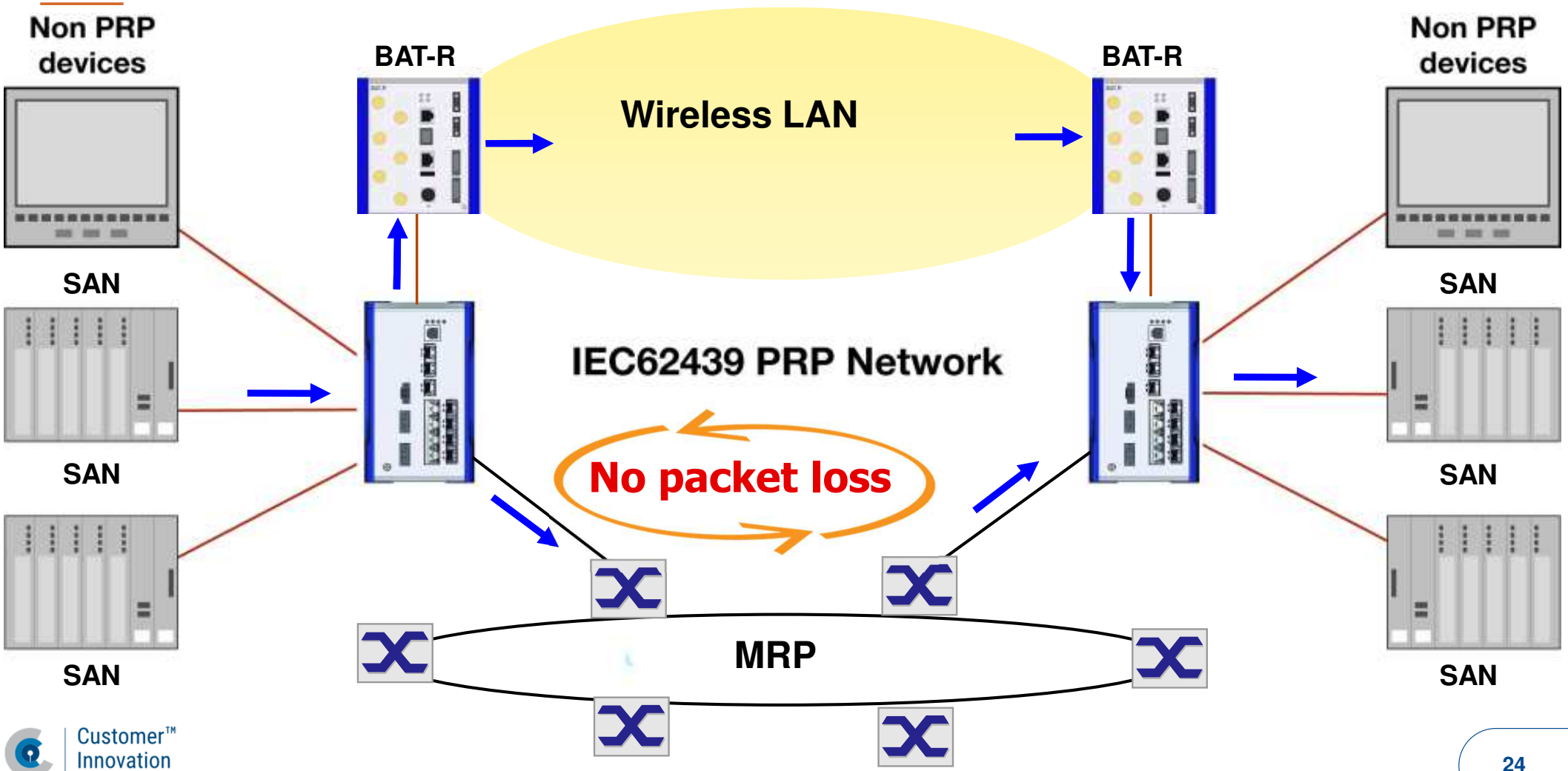

HSR (High Available Seamless Ring)

Zero Failover Redundant Ring

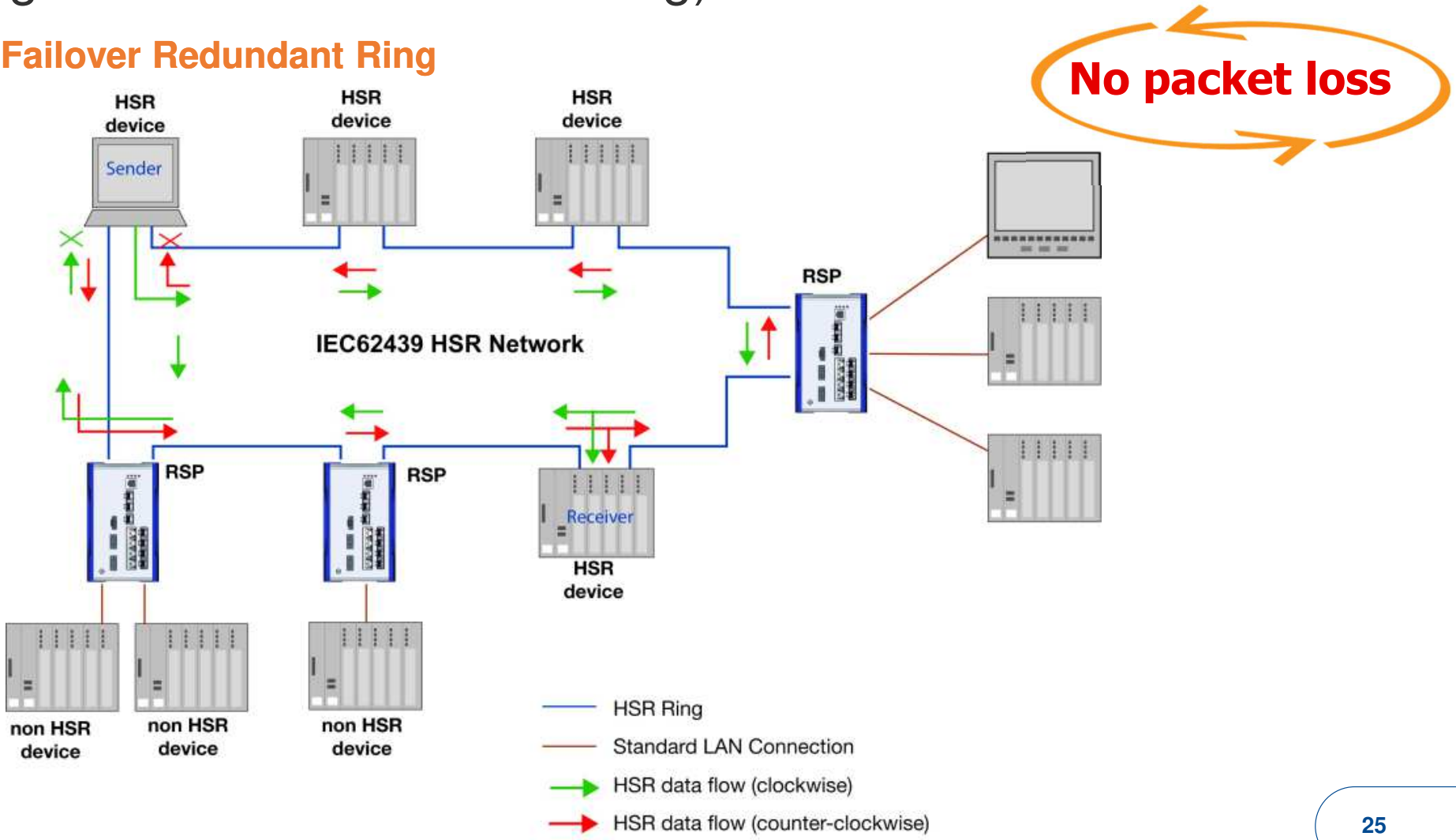

HSR with PRP Coupling

- Up to seven PRP connections per HSR ring
- "Redbox-Identity" for identification of coupling partners
- Cascading of HSR rings possible

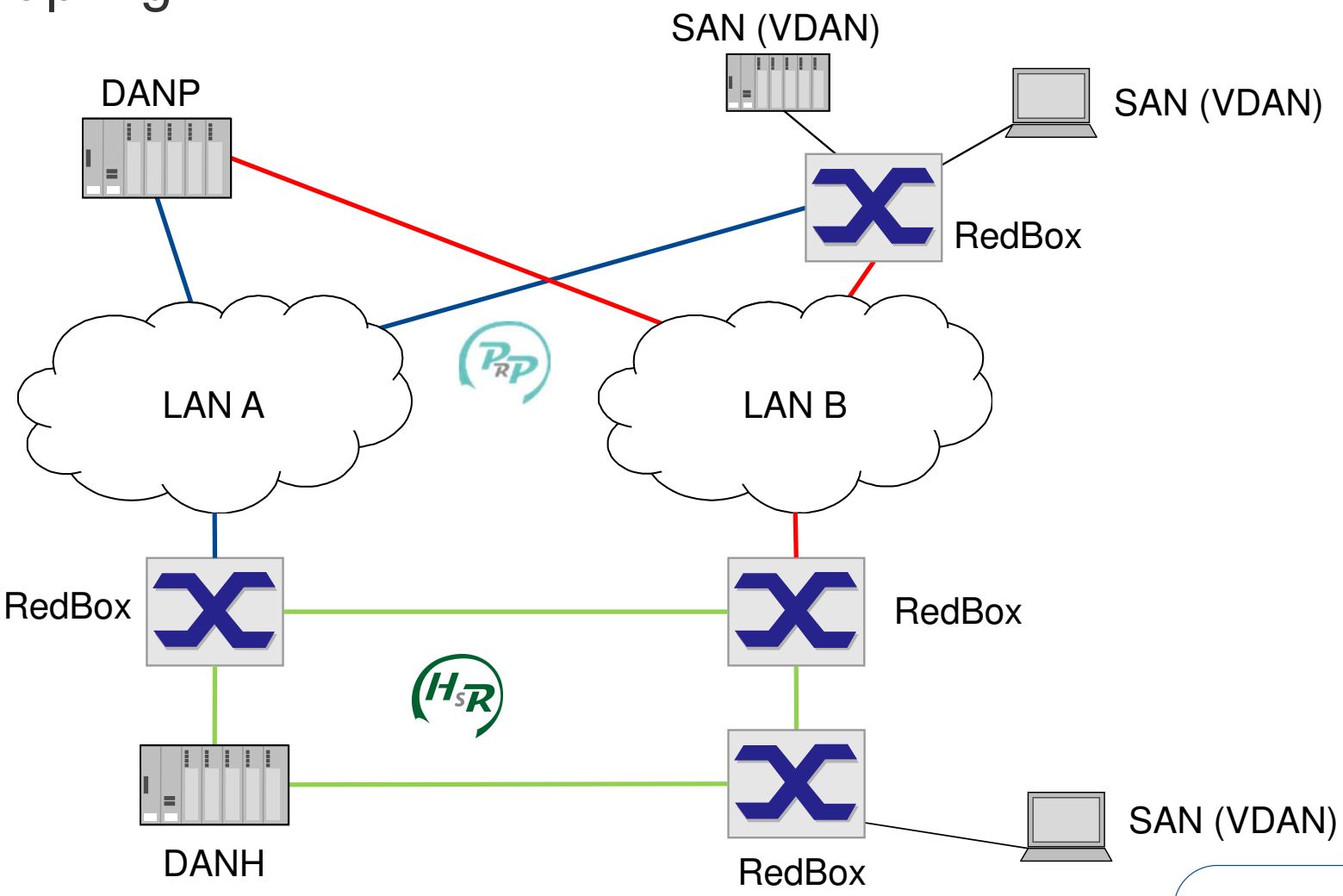

Multiple HSR Rings coupled via PRP

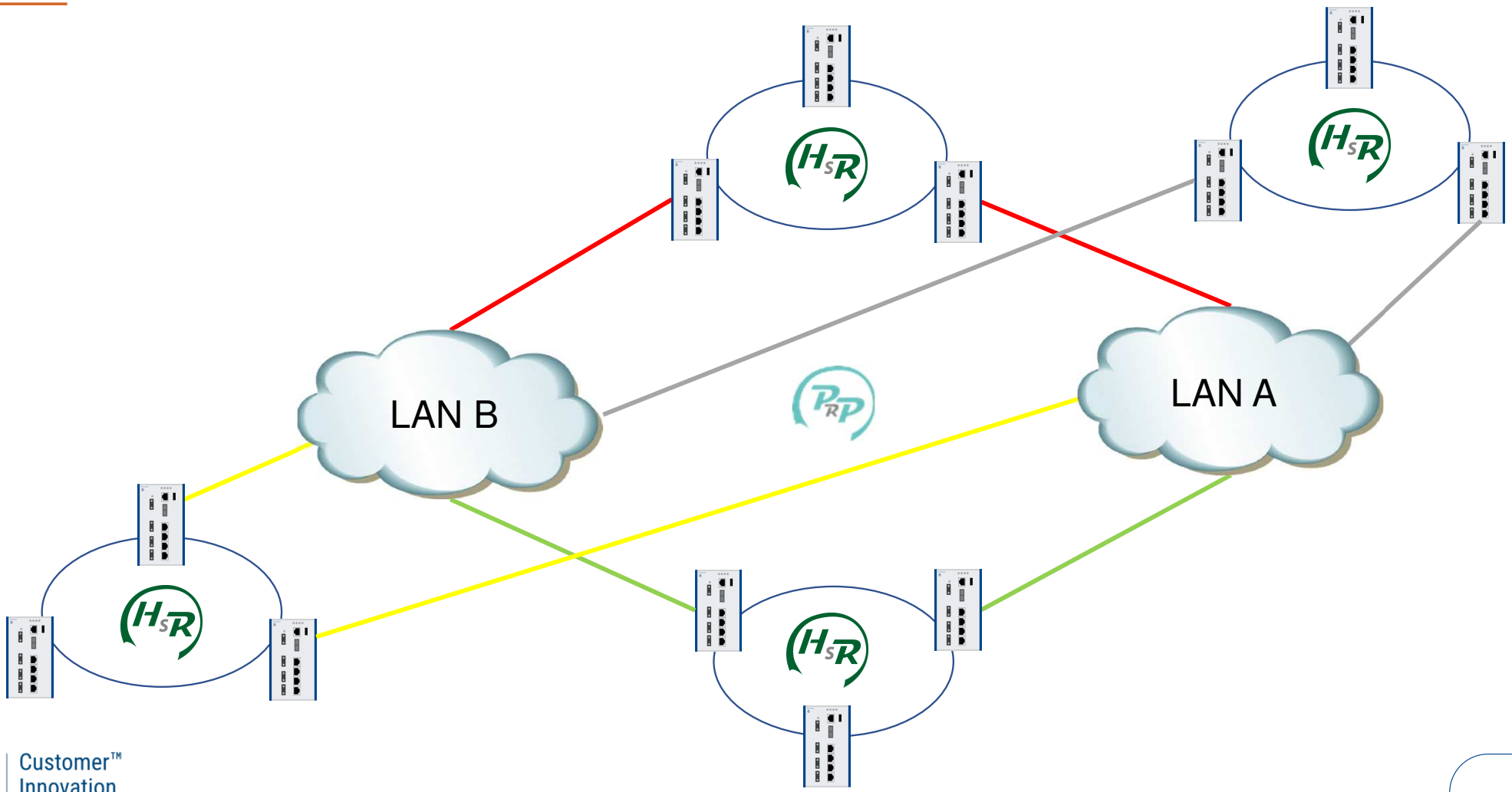

© Belden | belden.com

Multiple PRP Networks to a HSR Ring

Maximum 7 PRP Networks per HSR rings

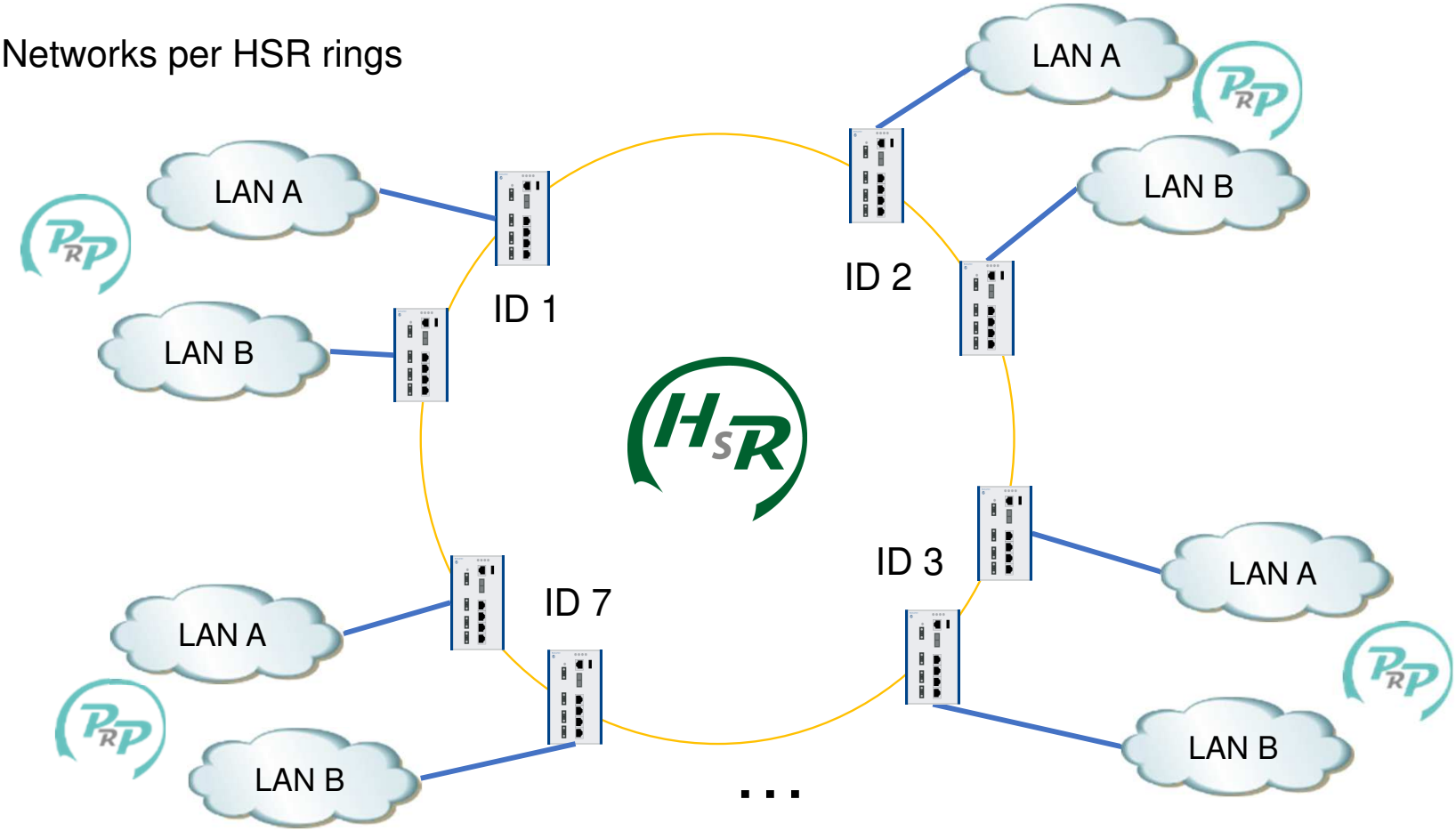

HSR – PRP Coupling: „Quadbox“

- Coupling of two HRS rings with “Quadbox”

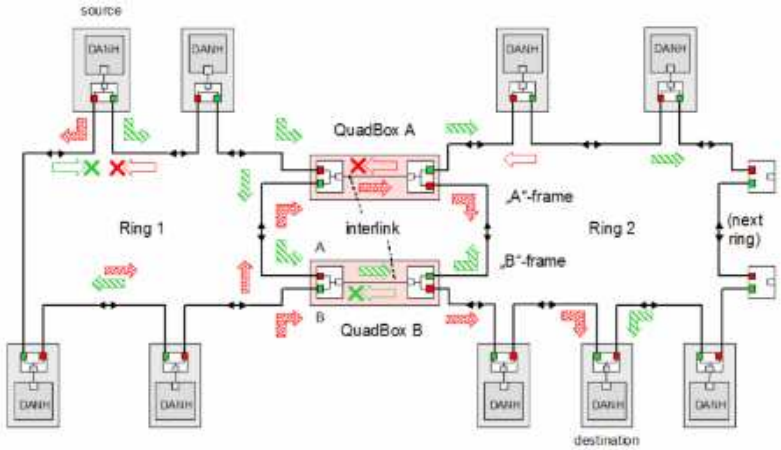

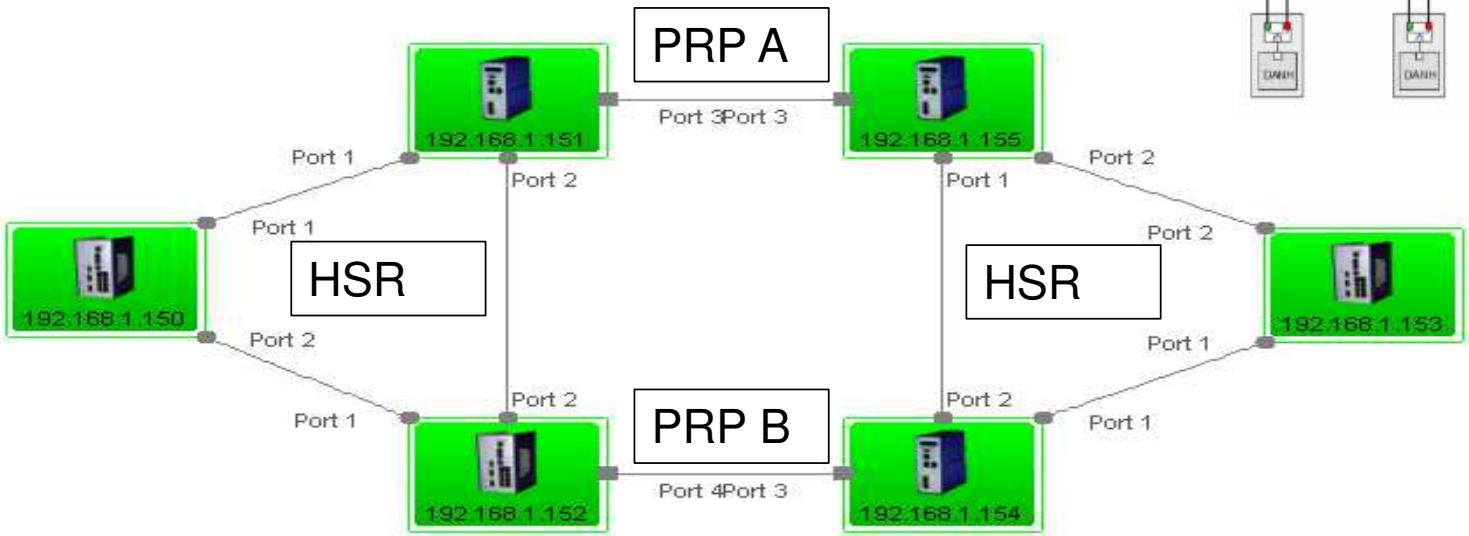

HSR – PRP Coupling: Possible Topologies

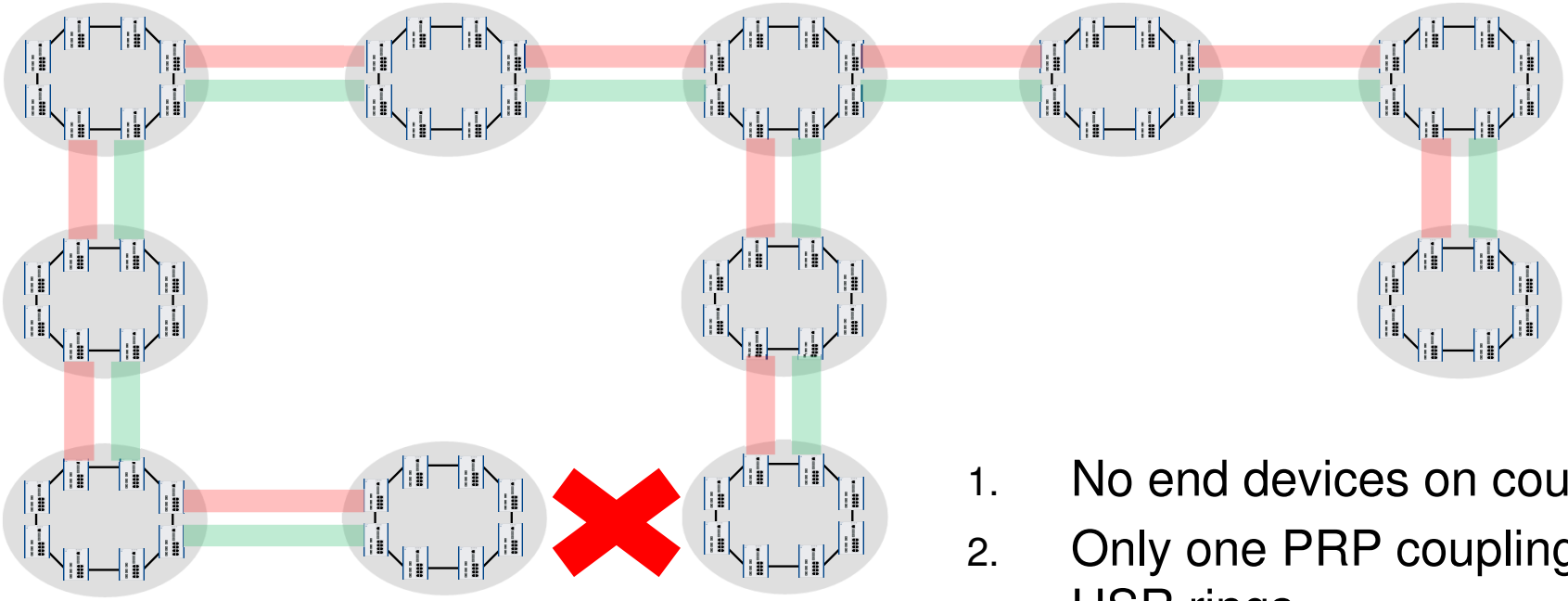

1. No end devices on coupling partners
2. Only one PRP coupling between two HSR rings
3. Seven PRP couplings per HSR ring
4. Avoid closed loops

© Belden | belden.com

Managing Redundancy

- Industrial HiVision
- Other SNMP management platforms
- SCADA via OPC
- Relay contact

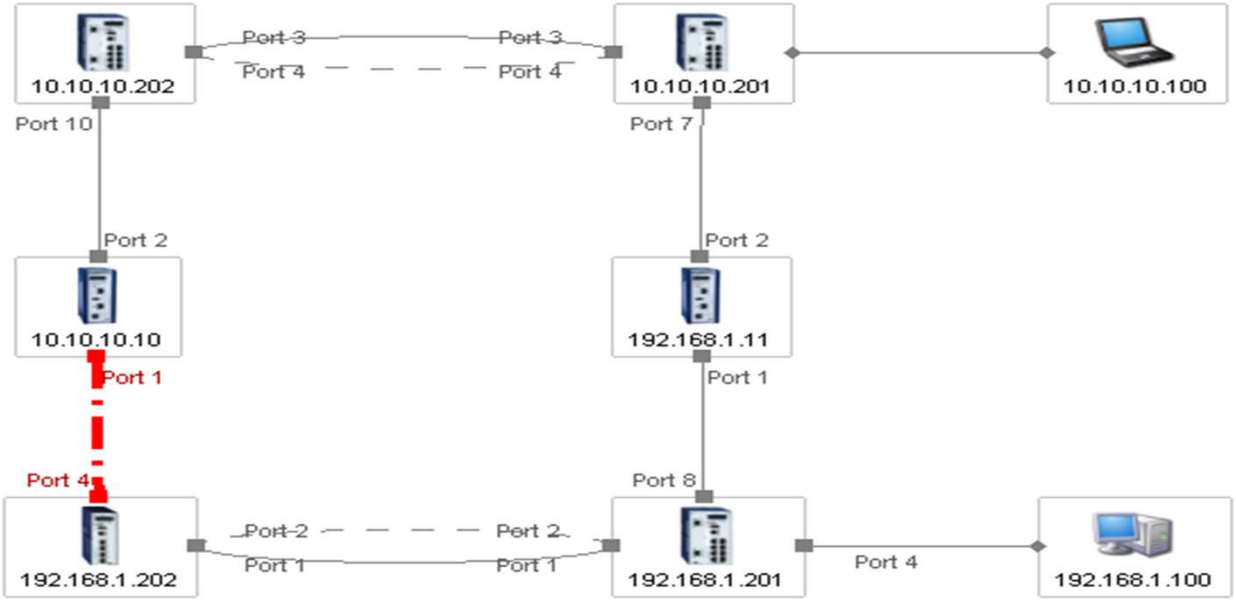

Q&A

© Belden | belden.com