Infinera

Optical Networking Innovations

Christian Uremovic, Sr. Director Solution Marketing

November 2023

Unaufhaltsam

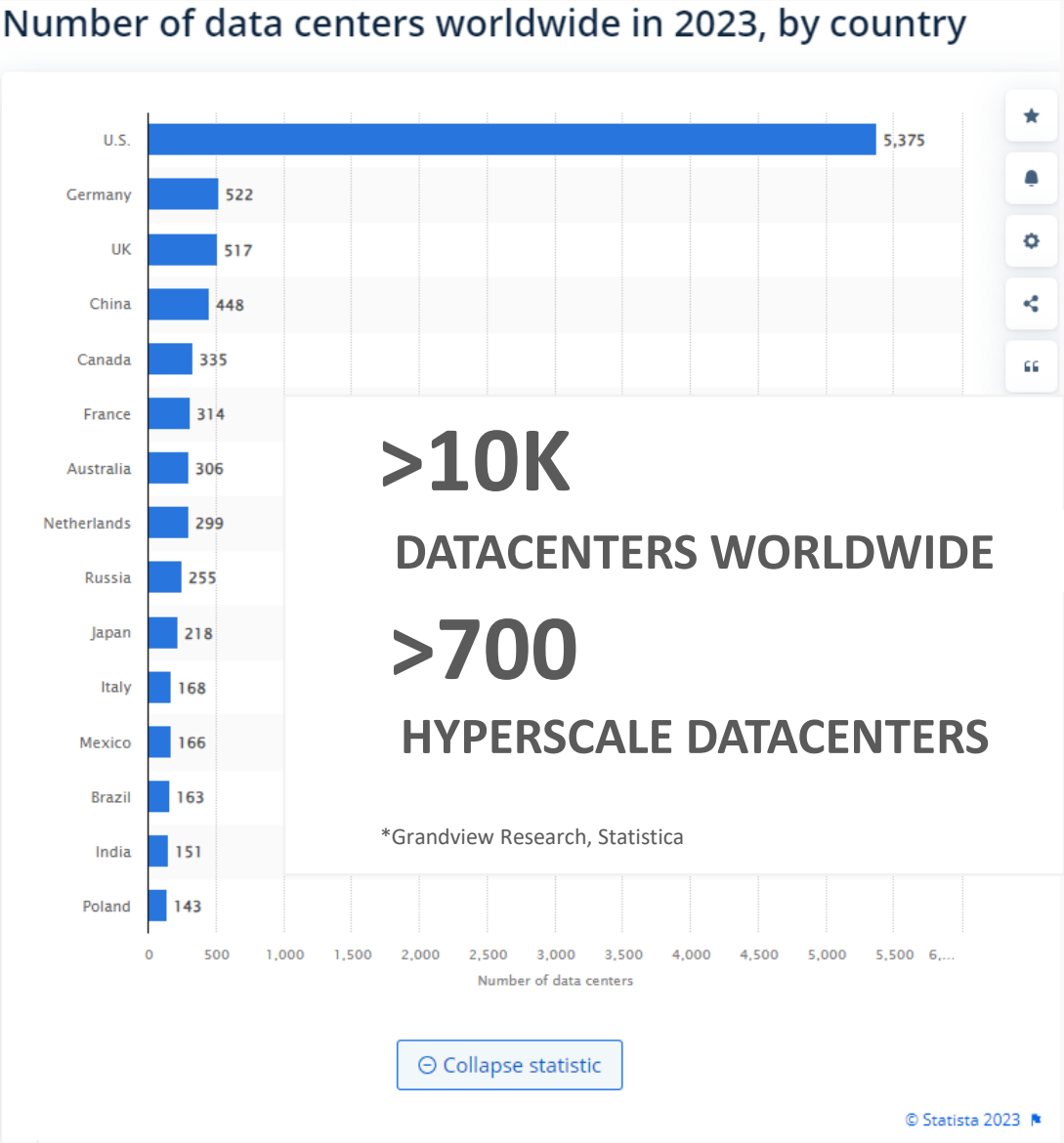

Glasfaserausbau geht voran

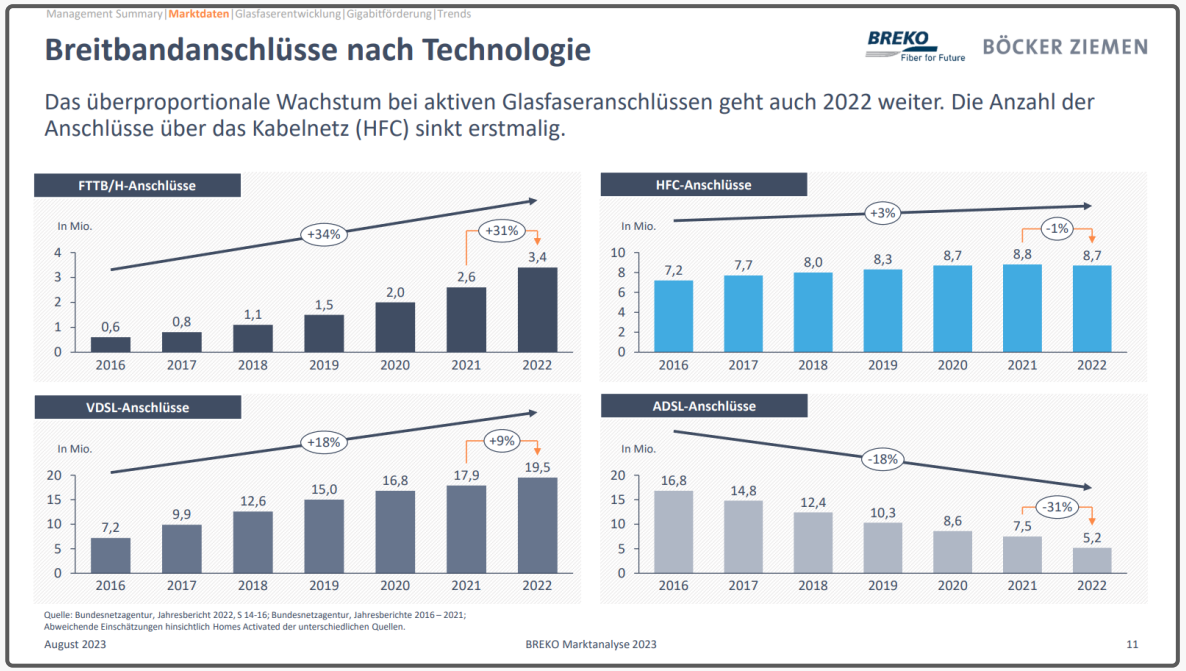

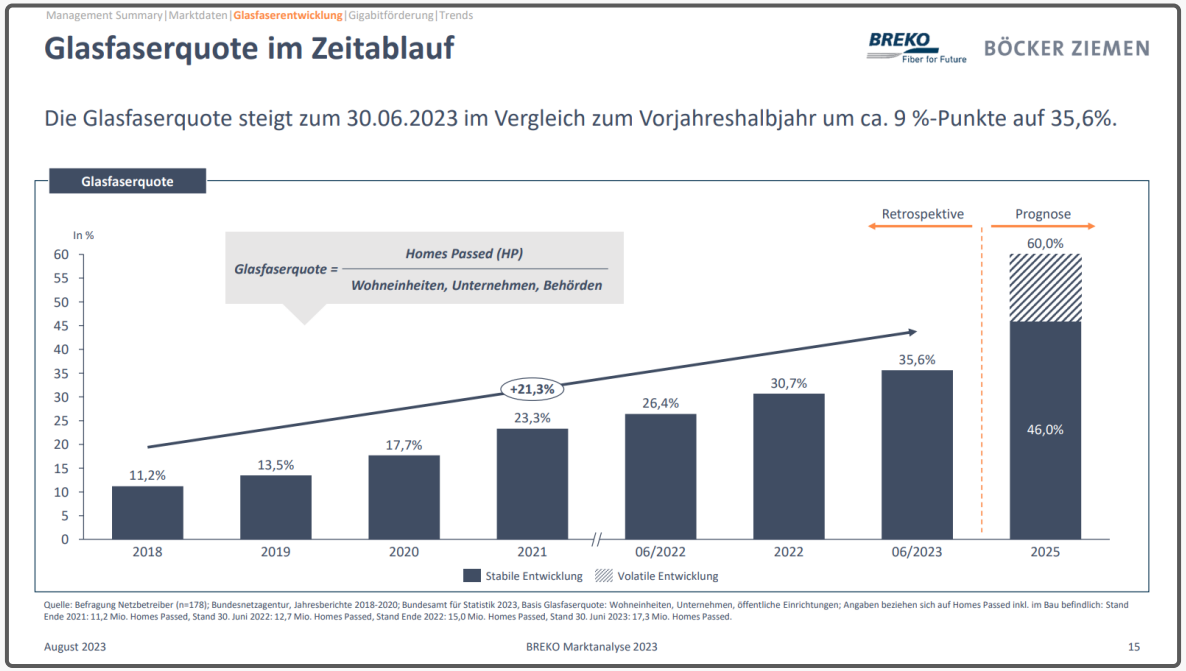

Glasfaser ist das beste Medium, um viel Daten zu übertragen

geringste Latenz, langlebig, stabil, zukunftssicher, umweltfreundlich

Glasfaserausbau zeigt größten Wachstum

© 2023 Infinera. All rights reserved. Company Confidential.

Wie können wir Datenübertragungskapazitäten erhöhen ?

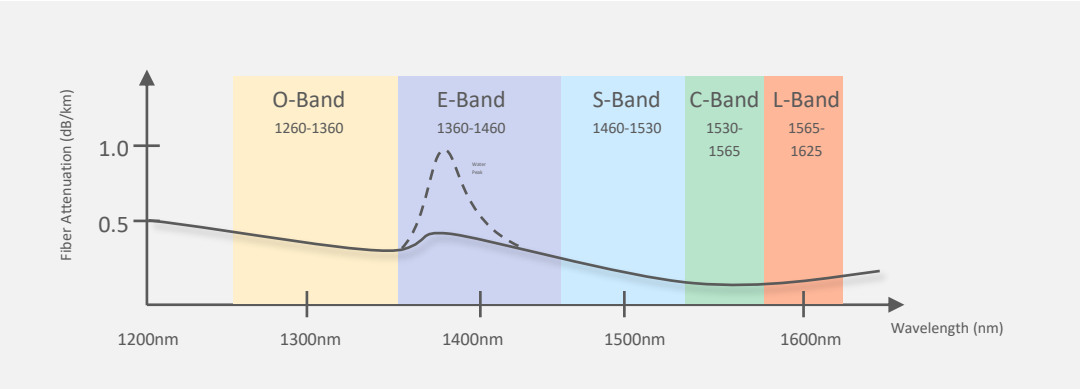

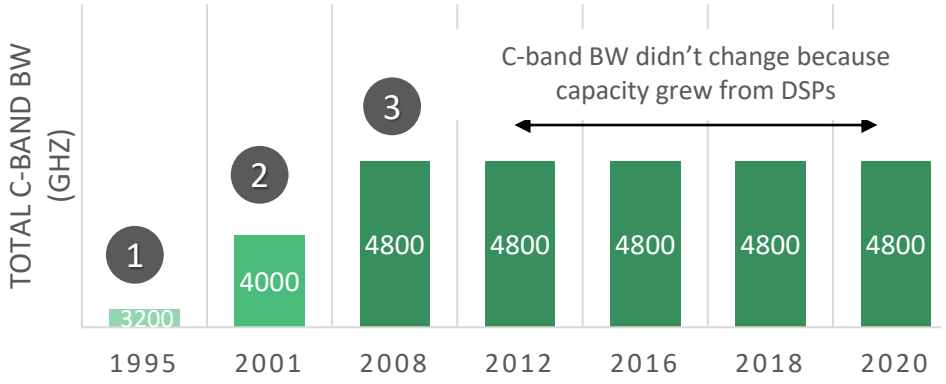

- C-Band usage 'grew' three times by 25% in 2000s
- C-band bandwidth stopped growth due to the "*coherent revolution*" started in 2010
- When DSPs went to QAM64 spectral efficiency improvements largely stopped

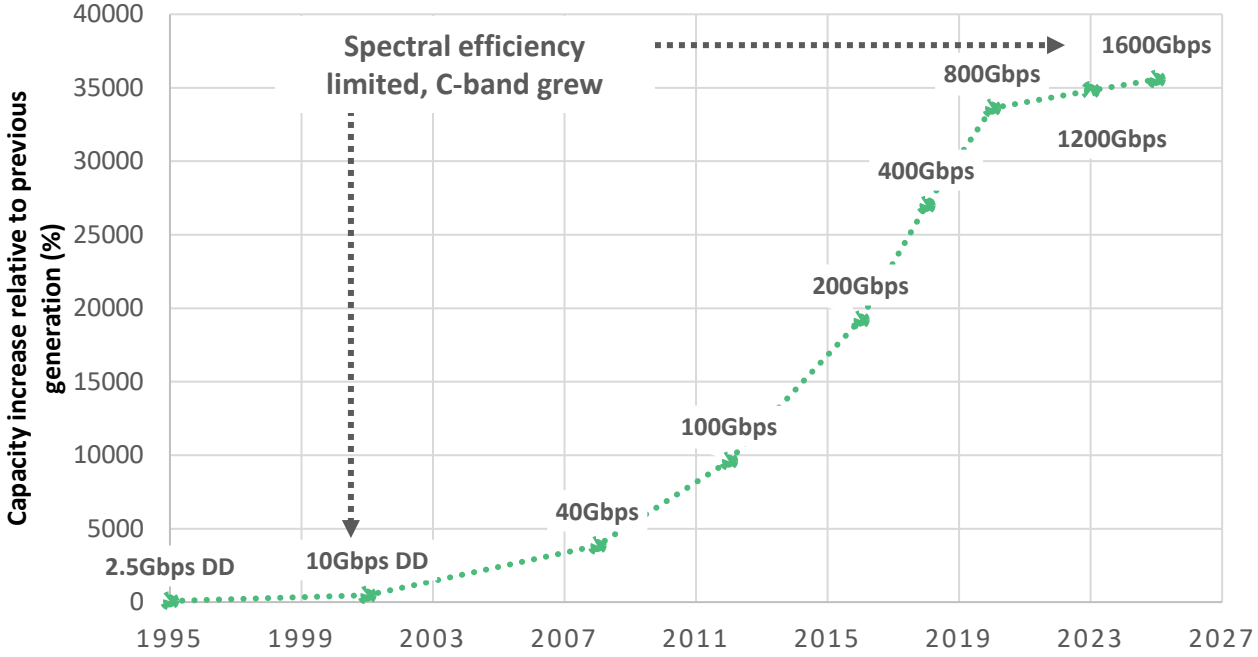

© 2023 Infinera. All rights reserved. Company Confidential.

‘Koheränte’ Revolution

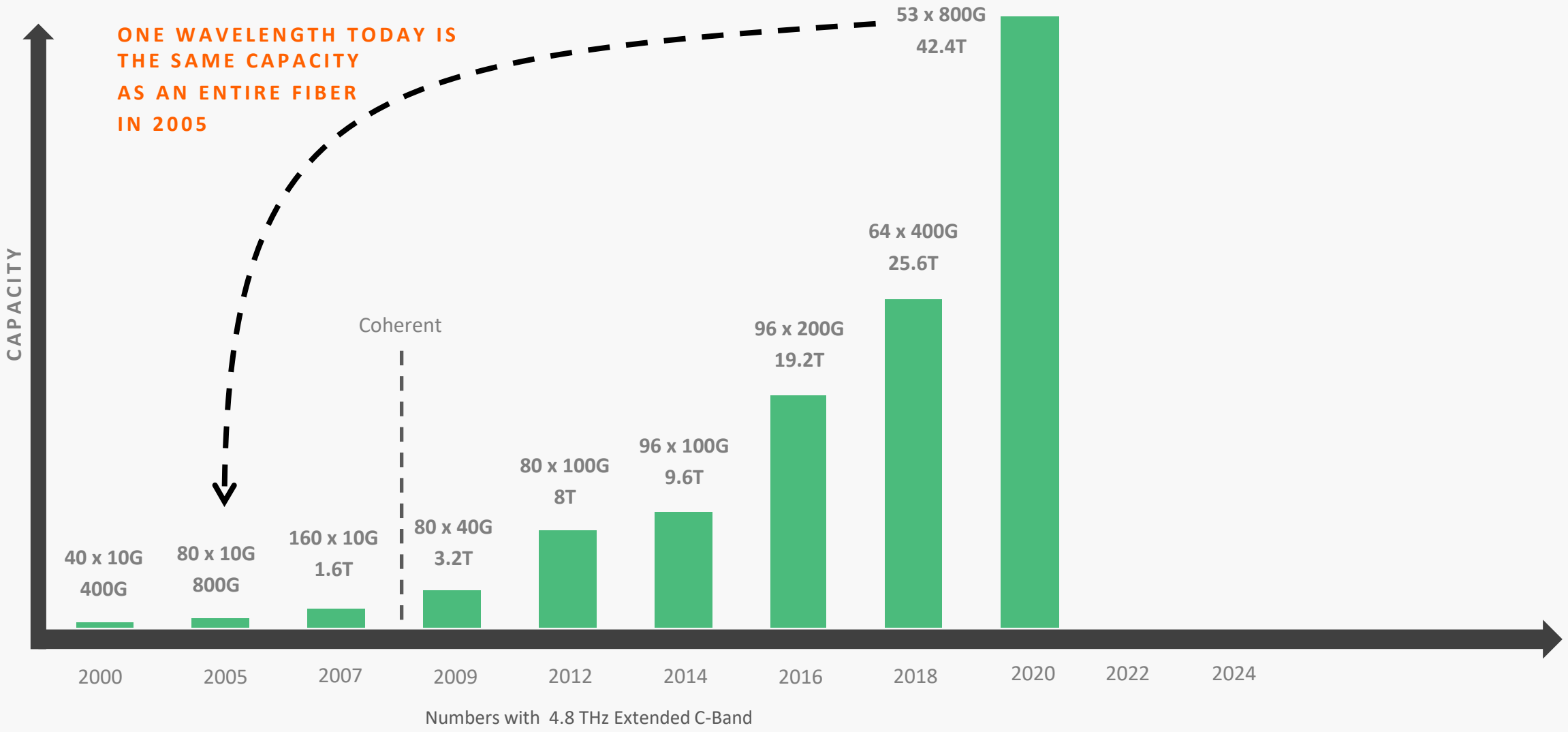

© 2023 Infinera. All rights reserved. Company Confidential.

‘Koheränte’ Revolution

C-Band + L-Band double the fiber capacity

Super C-Band + Super L-Band enable the 100Tbit era without performance-loss

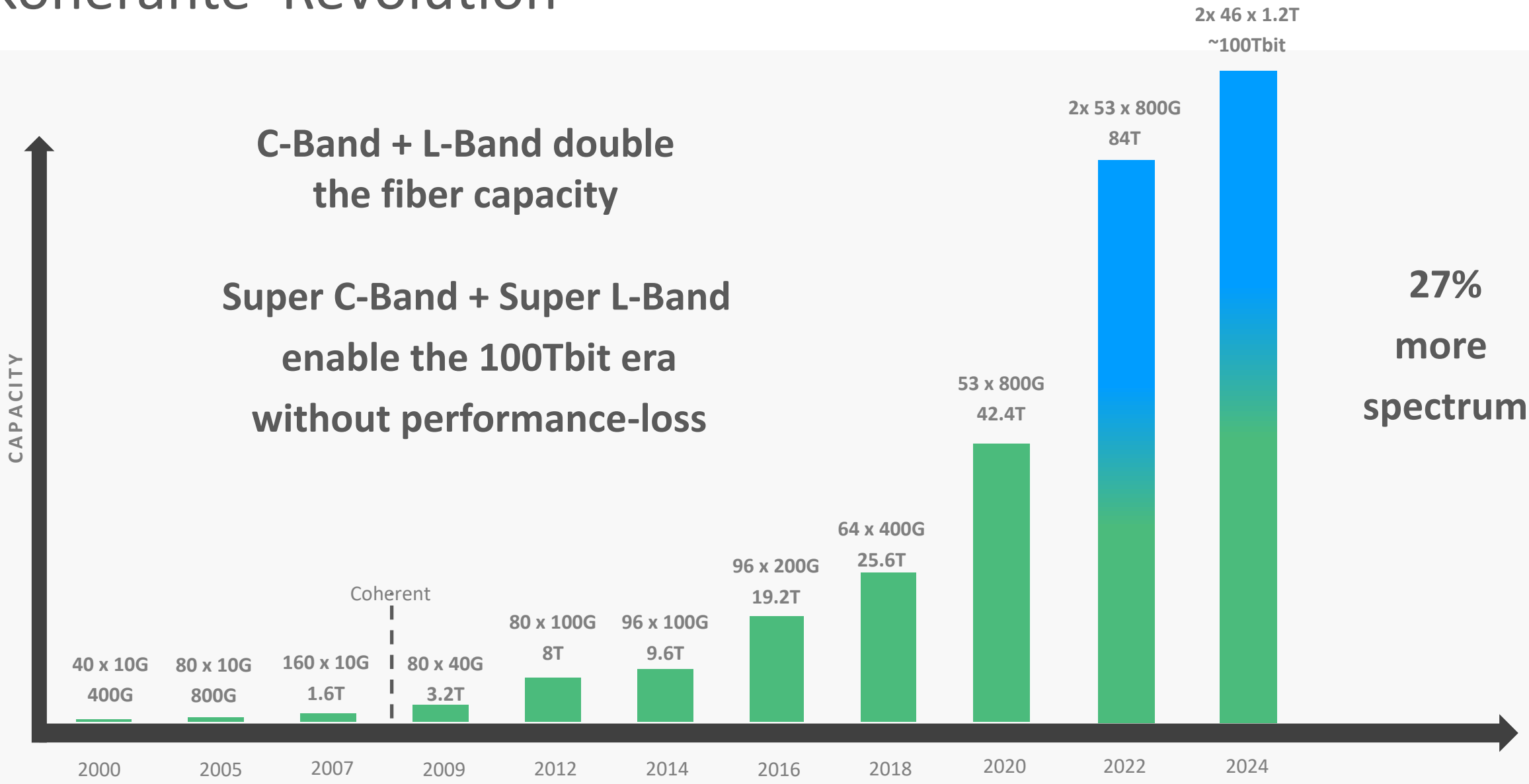

27% more spectrum

© 2023 Infinera. All rights reserved. Company Confidential.

Super C Band ist sehr effektiv

High baud-rate channels improve capacity at the expense of spacing and the overall improvement is very small

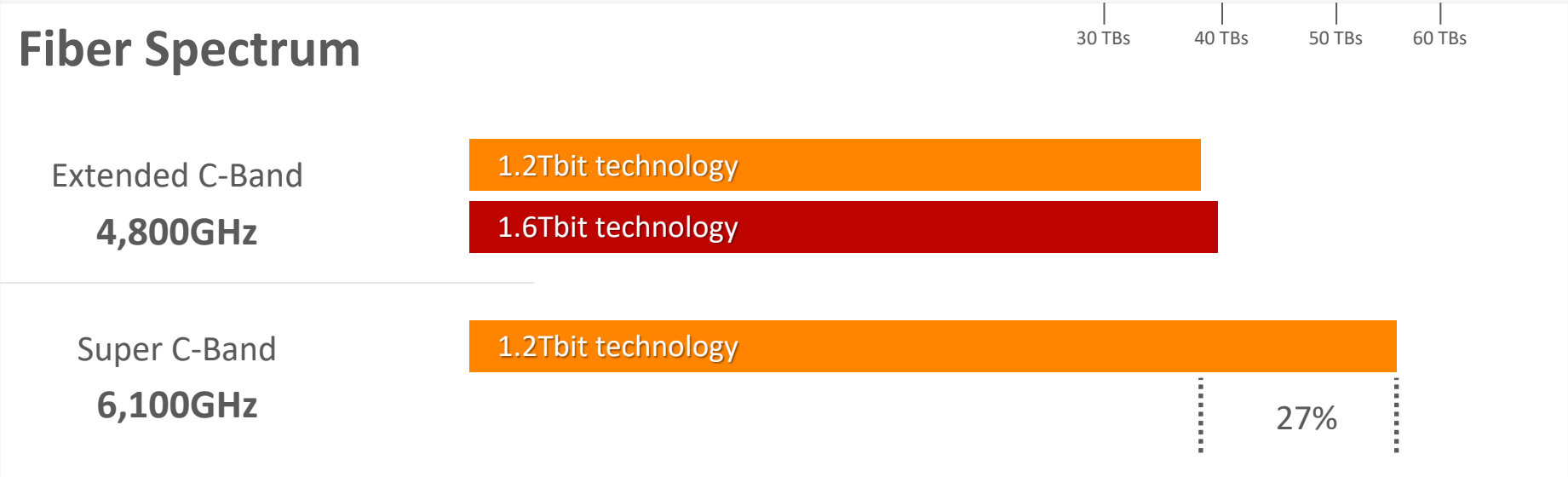

Super-C extends fiber capacity without any reach loss by 27%

*@ 119 Gbaud

© 2023 Infinera. All rights reserved. Company Confidential.

Transponder Entwicklung reduziert Energieverbrauch

	2013	2015	2016	2018	2020	2023	2025
Embedded optics	**100G**	**200G**	**400G**	**600G**	**800G**	**1.2T**	**future**
CMOS/DSP	40nm	28nm	28nm	16nm	7nm	5nm	3nm
Watt/Gbit	**~2 W/Gbit**	**0.4 W/Gbit**	**0.2 W/Gbit**	**0.2 W/Gbit**	**0.2 W/Gbit**	**0.14 W/Gbit**	
Reach @400G			~800km	~1,000km	~7,000km	~12,000km	
Pluggable optics			**200G**		**400G**		**800G**
Format			CFP2		QSFP-DD		OSFP
CMOS/DSP			28nm		7nm		5nm
Watt/Gbit			**0.1 W/Gbit**		**0.05 W/Gbit**		

Mehr Daten bei gleichzeitig
größere Übertragungsreichweite und geringerem Energieverbrauch

© 2023 Infinera. All rights reserved. Company Confidential.

Transpondertechik – Core und Longhaul Netze

MODULE CAPACITY @ 600Gλ vs. TECHN. GENERATION vs. REACH vs. POWER CONSUMPTION

EMBEDDED OPTICS

2017/2018
5th generation (69Gbaud)

2x 600Gλ
150km
~400 Watt
end to end

2020/2021
6th Generation (96Gbaud)

2x 800Gλ
1,000km
~600 Watt
end to end

2023/2024
7th generation (148Gbaud)

2x 1Tλ
1,500km
~700 Watt
end to end

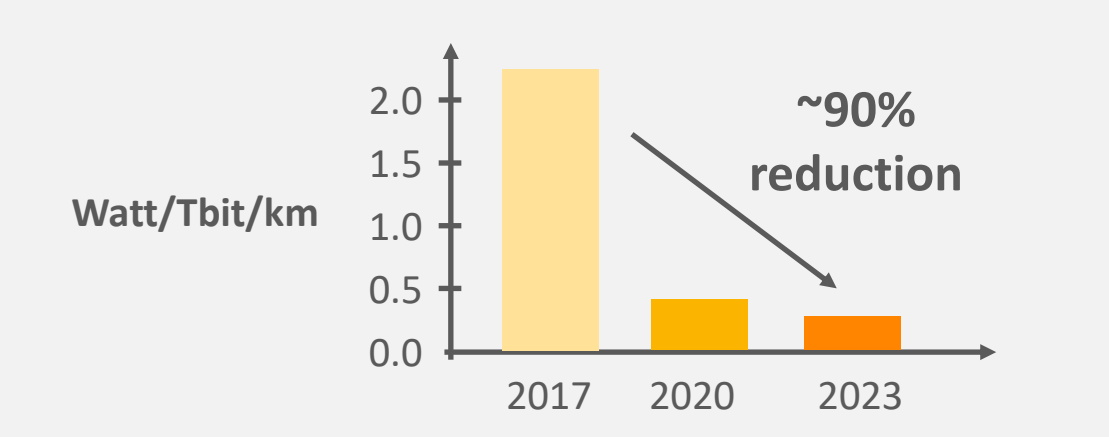

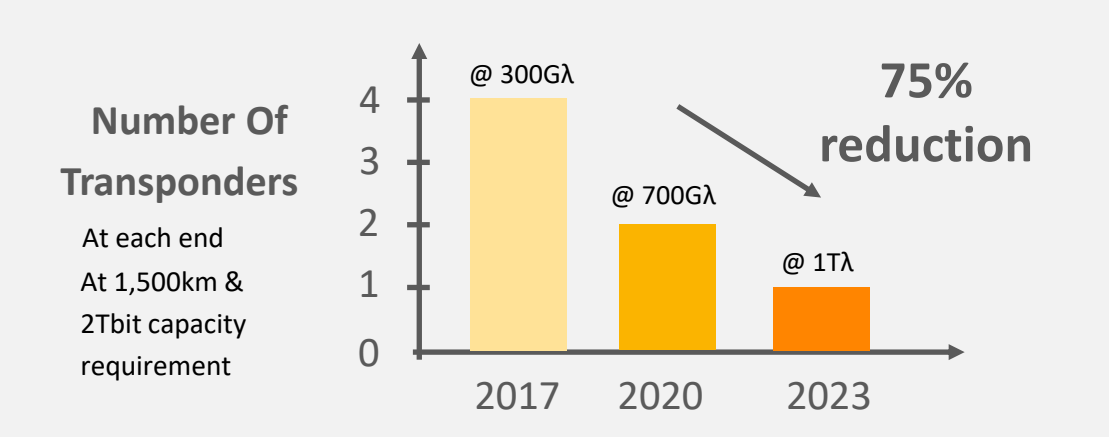

Decreasing power/bit while increasing fiber capacity and wavelength-capacity reach

Infinera

© 2023 Infinera. All rights reserved. Company Confidential.

Transpondertechnik – Metro Netze

MODULE CAPACITY @ 600Gλ vs. TECHN. GENERATION vs. REACH vs. POWER CONSUMPTION

PLUGGABLE OPTICS

28nm CMOS/DSP
32Gbaud generation

2017

100GE	200Gλ CFP2-DCO
100GE	
100GE	200Gλ CFP2-DCO
100GE	

CHM1

7nm CMOS/DSP
64Gbaud generation

2021

100GE	400Gλ CFP2-DCO
100GE	
100GE	400Gλ CFP2-DCO
100GE	

CHM1R

5nm CMOS/DSP
140Gbaud generation

2025

400GE	800Gλ QSFP-DD 800
400GE	
400GE	800Gλ QSFP-DD 800
400GE	

CHM1R-800

Wavelength capacity reach

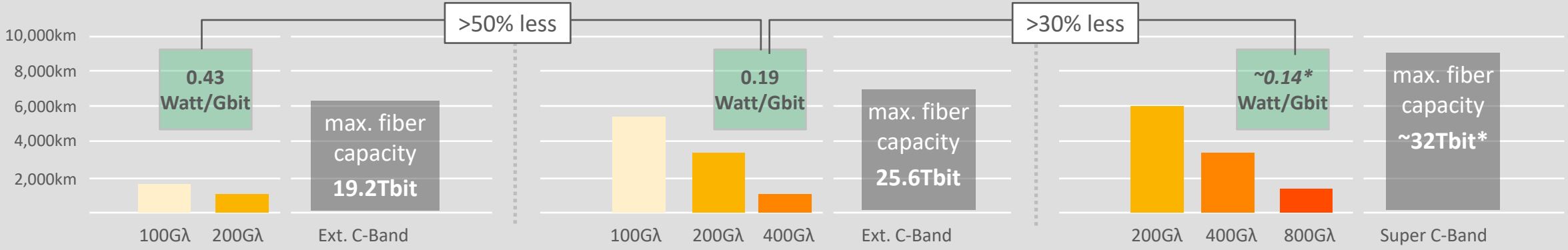

Decreasing power/bit while increasing fiber capacity and wavelength-capacity reach

Infinera

© 2023 Infinera. All rights reserved. Company Confidential.

Open Networking

Transponder Overlay

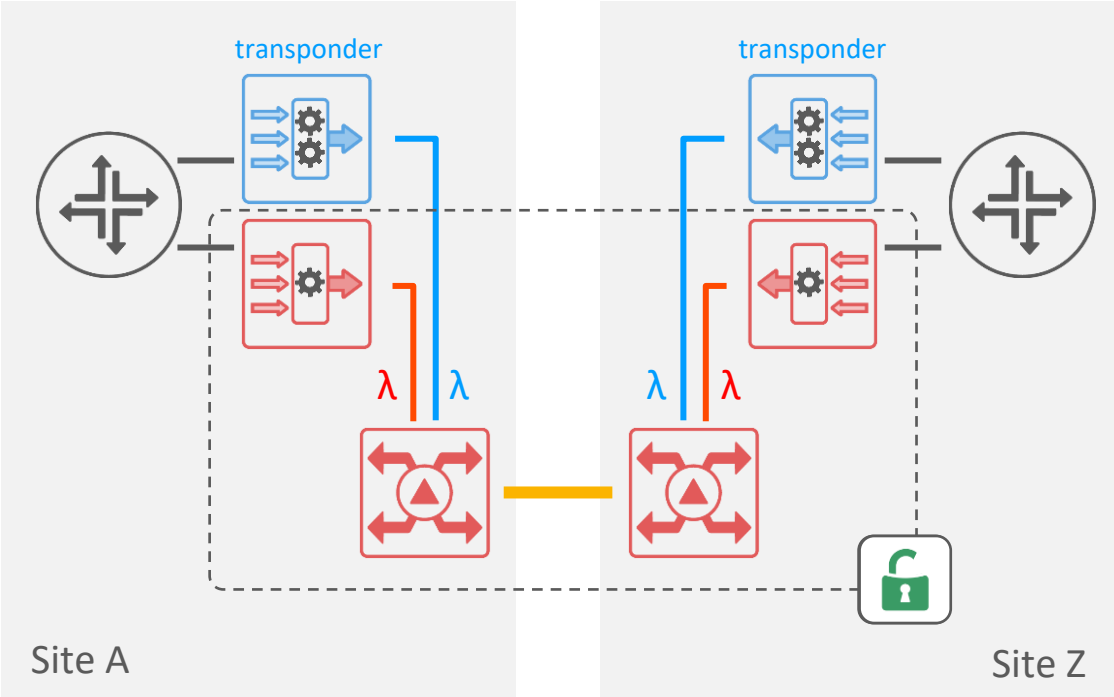

+ De-risk business
Faster innovations
Improved economics

- Perceived operational complexity

IPoDWDM

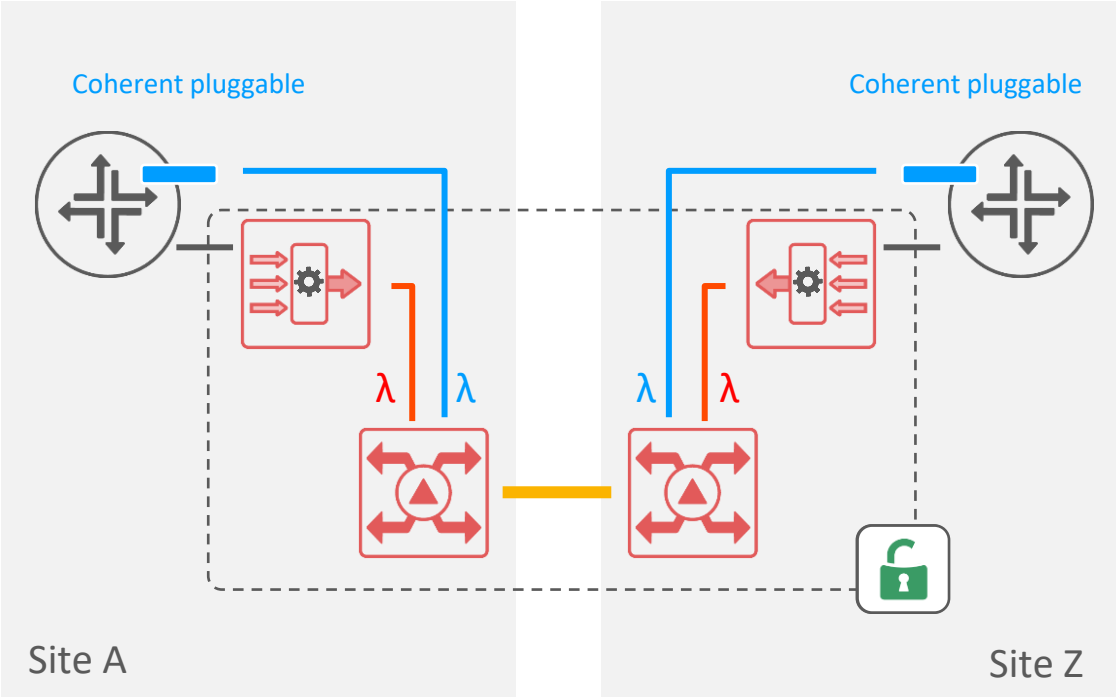

+ De-risk business
Improved economics

- Perceived operational complexity
Router support of latest coherent innovations

© 2023 Infinera. All rights reserved. Company Confidential.

Koheränte Technik : Neu gedacht!

NETWORK TRAFFIC PATTERN

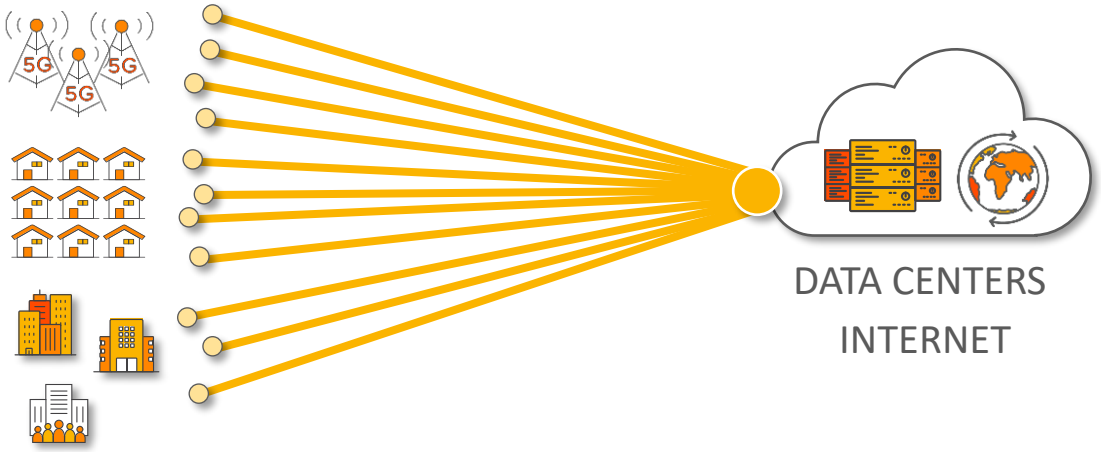

TYPICALL HUB & SPOKE

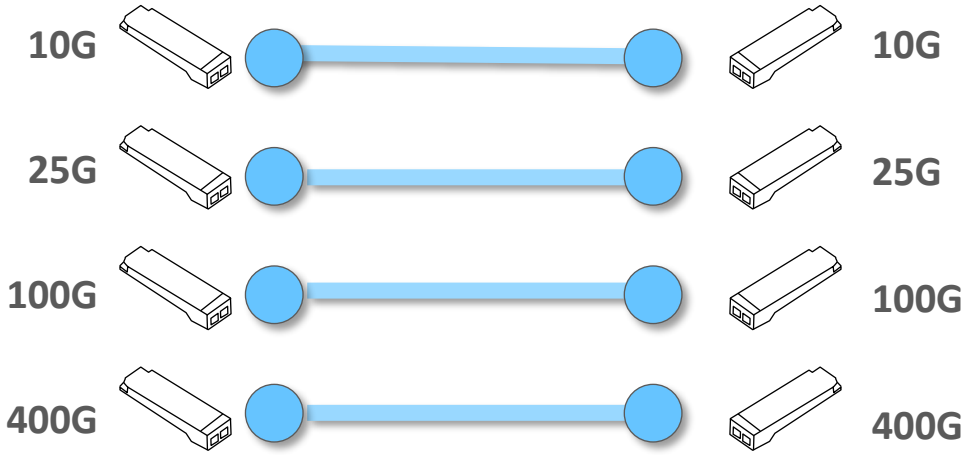

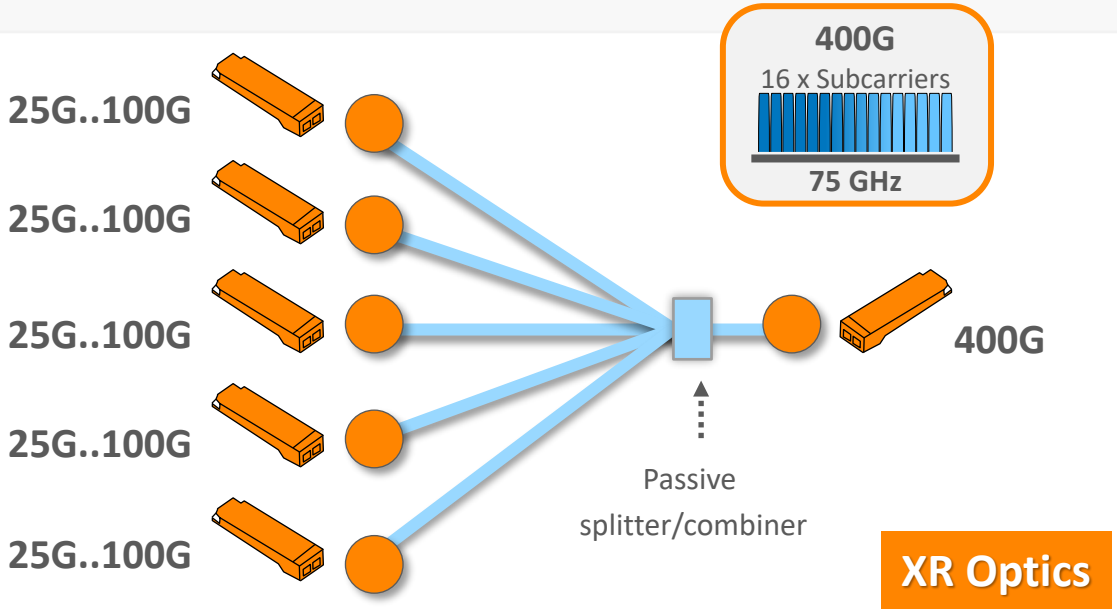

© 2023 Infinera. All rights reserved. Company Confidential.

Point-to-Point Anwendungen

25dB (~80km) optical budget without amps
35dB (~120km) optical budget with amps

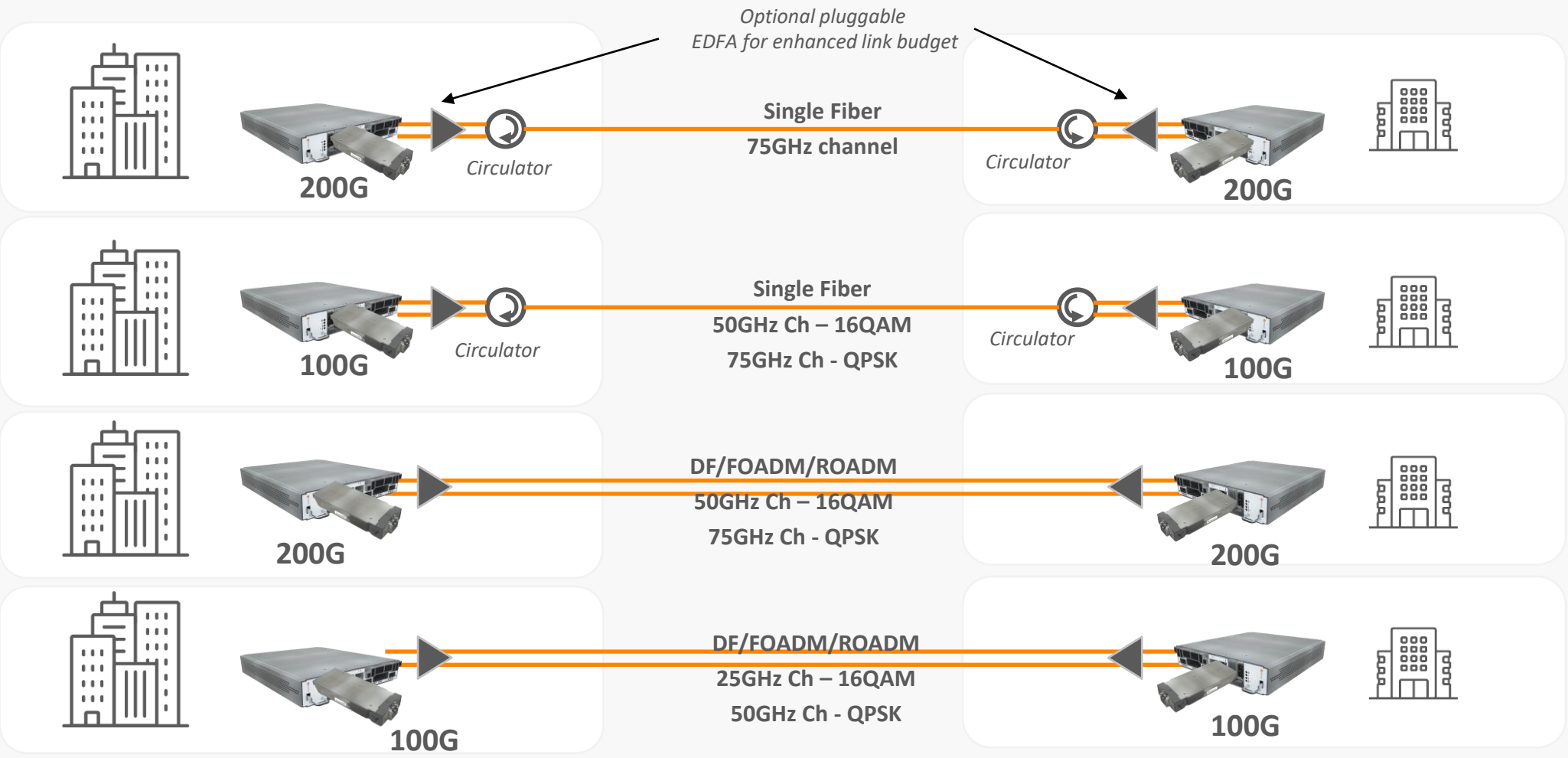

100G or 200G capacity delivery over fiber pair or over single fiber

© 2023 Infinera. All rights reserved. Company Confidential.

Flexible Granularität bei Single Fiber Konnektivität

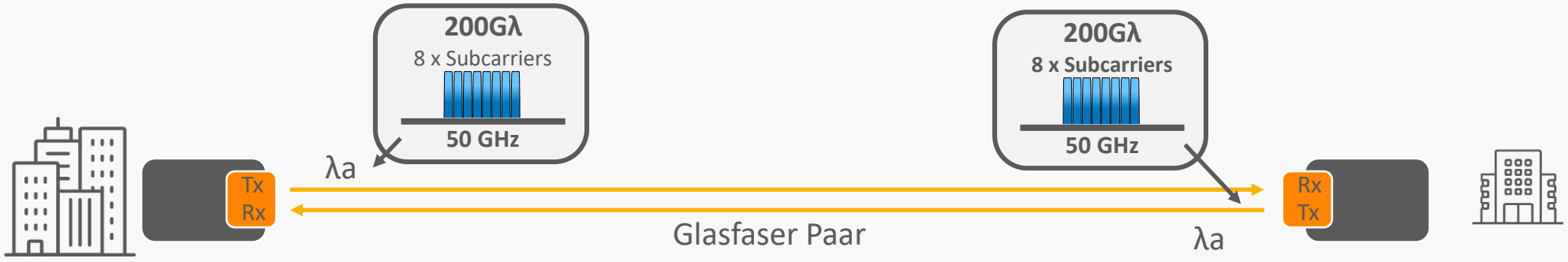

25G-100Gbit Konnektivität über single fiber mit XR Optics

© 2023 Infinera. All rights reserved. Company Confidential.

Anwendungsbeispiel

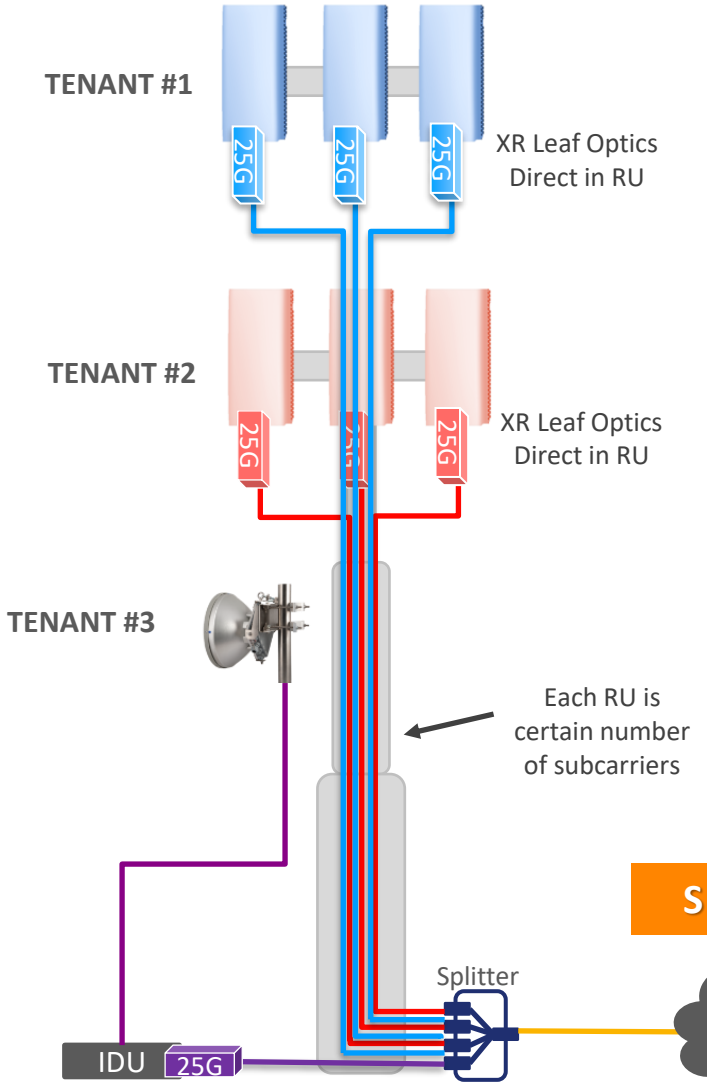

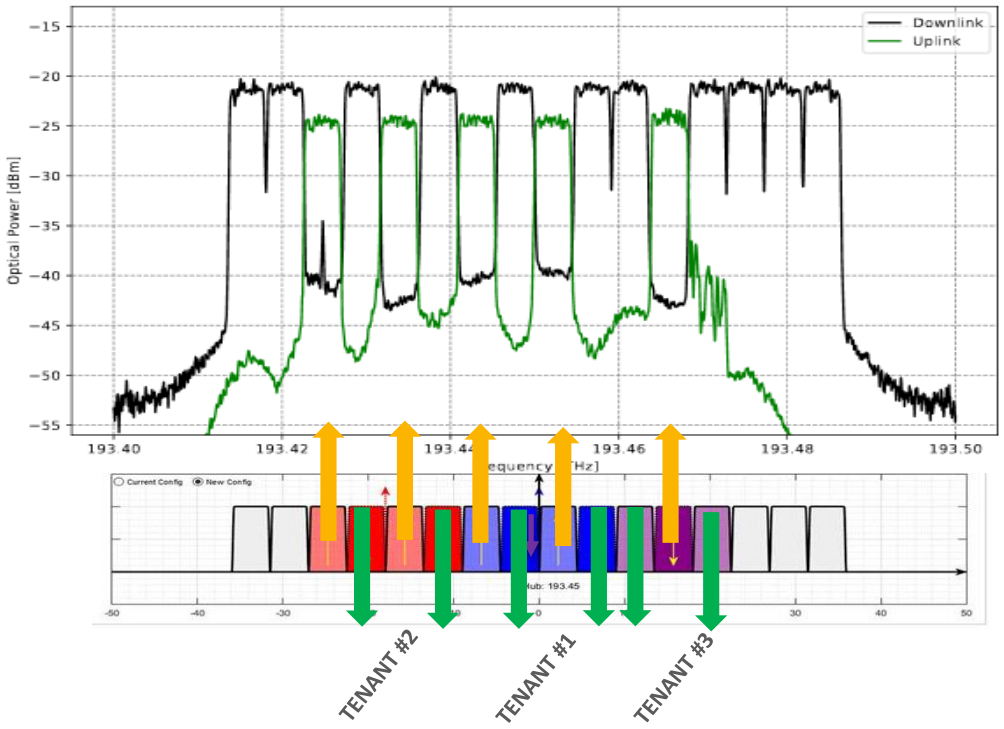

Single Fiber!

TRANSPORT AGGREGATION

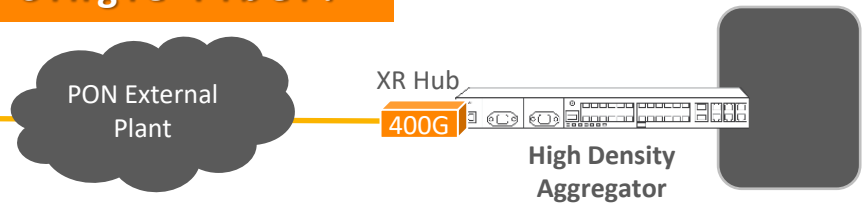

© 2023 Infinera. All rights reserved. Company Confidential.

Anwendungsbeispiel

Individual Fiber Extensions

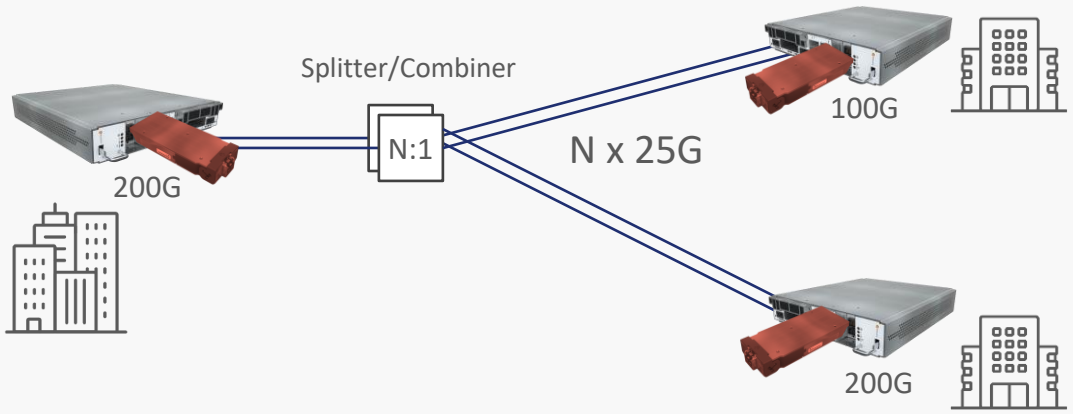

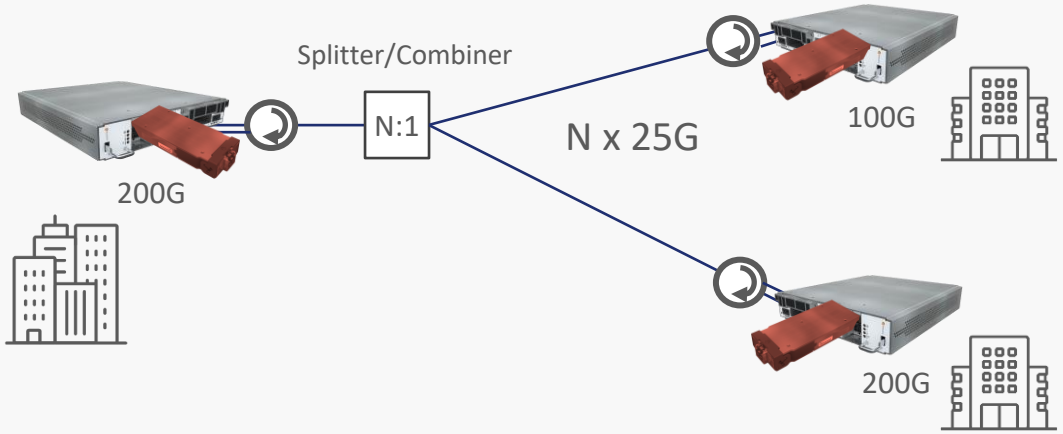

Drop & Continue

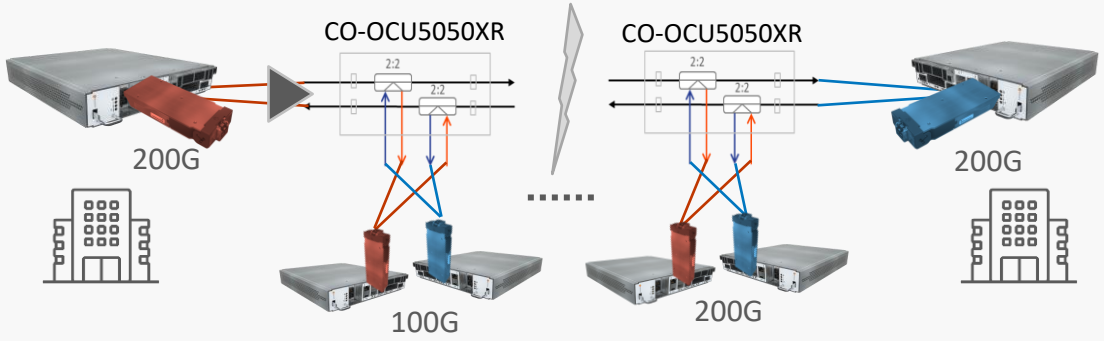

- Pluggable EDFA in NDU for extended reach
- Frequency setting for higher Tx power
  - +2dBm Tx launch
- Fixed filter at hub side to enable higher split ratios / sites
- Optional: Software App for Managing Pluggables

© 2023 Infinera. All rights reserved. Company Confidential.

Anwendungsbeispiel - 3rd Party Host

Individual Fiber Extensions

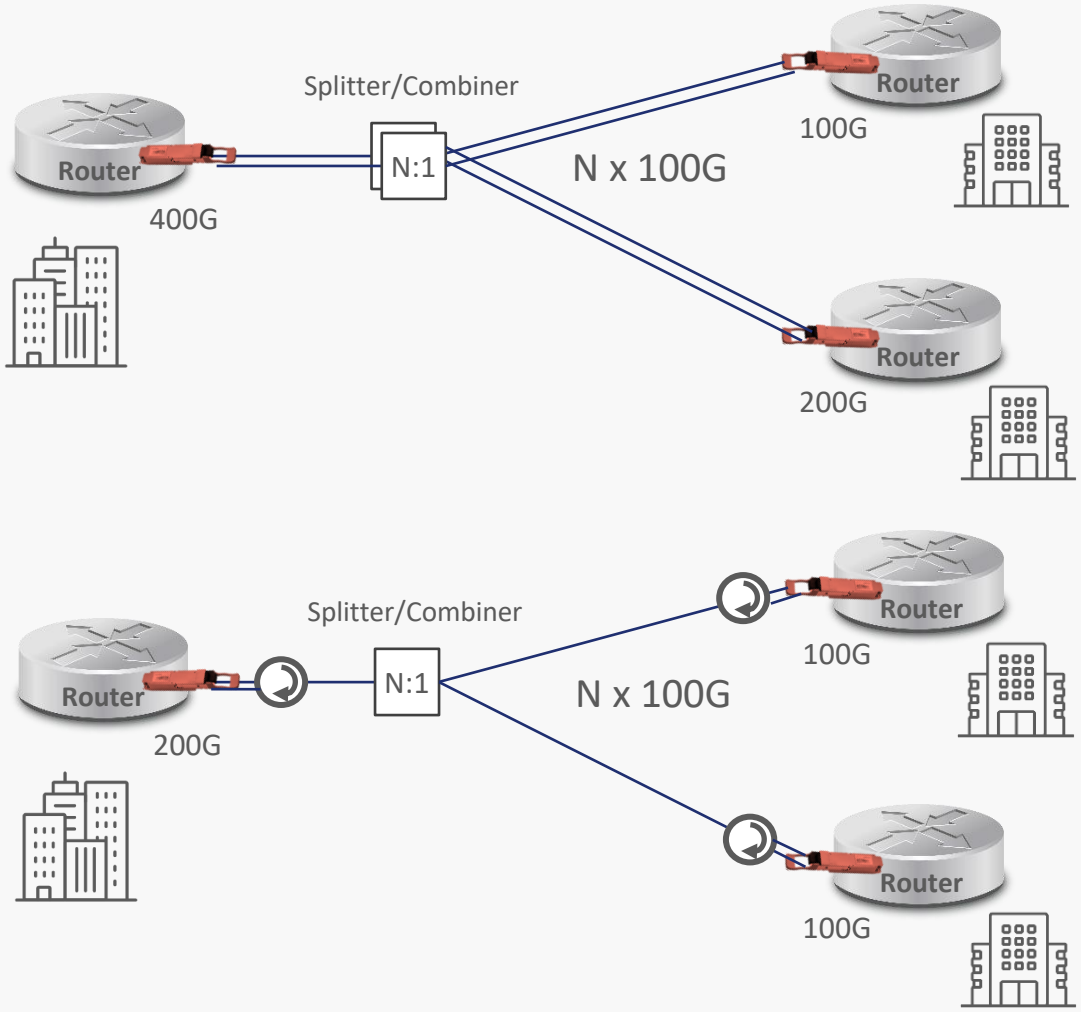

Drop & Continue

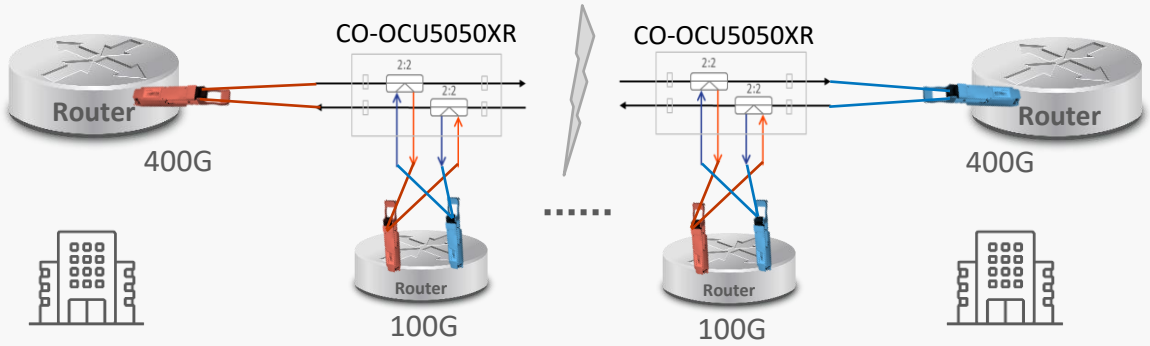

- Breakout cable function with longer reach
- Pluggable EDFA in NDU for extended reach
- Frequency setting for higher Tx power
  - +2dBm Tx launch
- Fixed filter at hub side to enable higher split ratios / sites
- Optional: Software App for Managing Pluggables

© 2023 Infinera. All rights reserved. Company Confidential.

Anwendungsbeispiel: Mixed

Individual Fiber Extensions

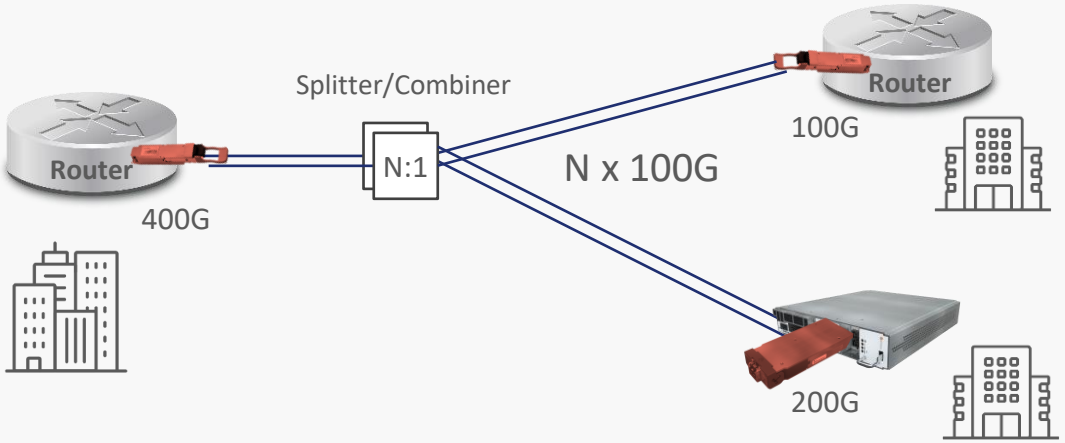

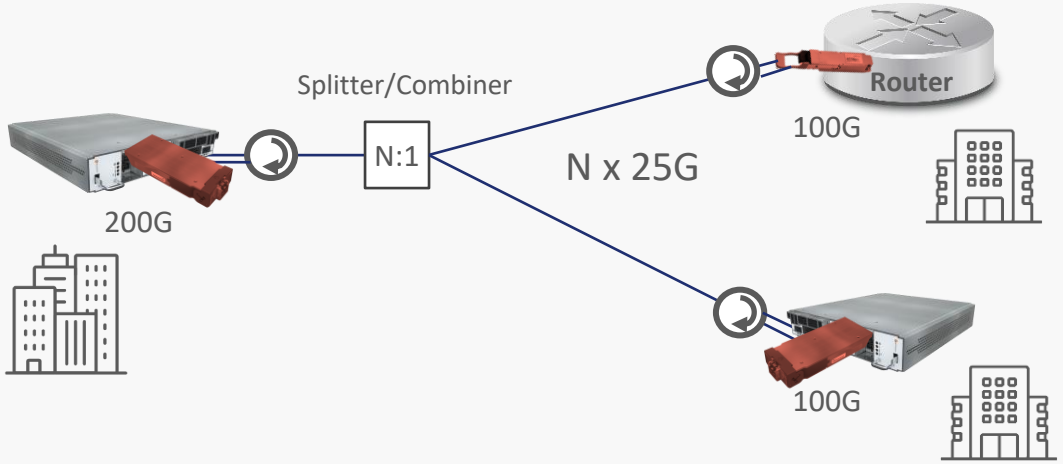

Drop & Continue

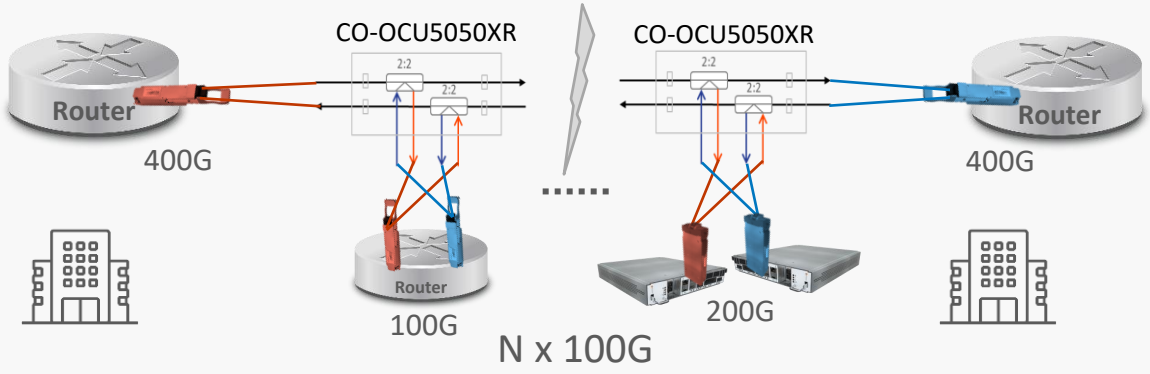

- Breakout cable function with longer reach
- Pluggable EDFA in NDU for extended reach
- Frequency setting for higher Tx power
  - +2dBm Tx launch
- Fixed filter at hub side to enable higher split ratios / sites
- Optional: Software App for Managing Pluggables

© 2023 Infinera. All rights reserved. Company Confidential.

Unser Portfolio für optische Übertragungstechnik

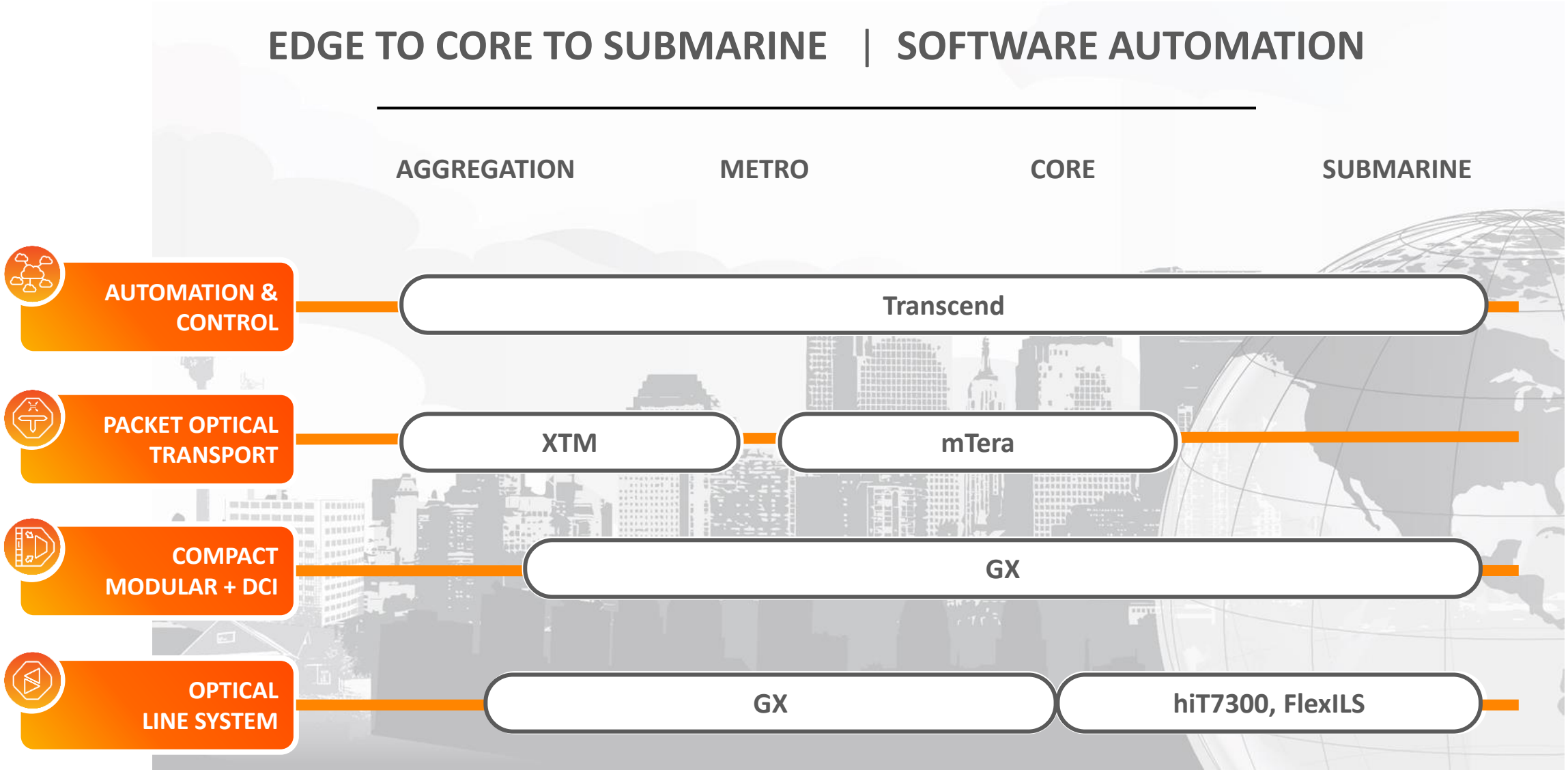

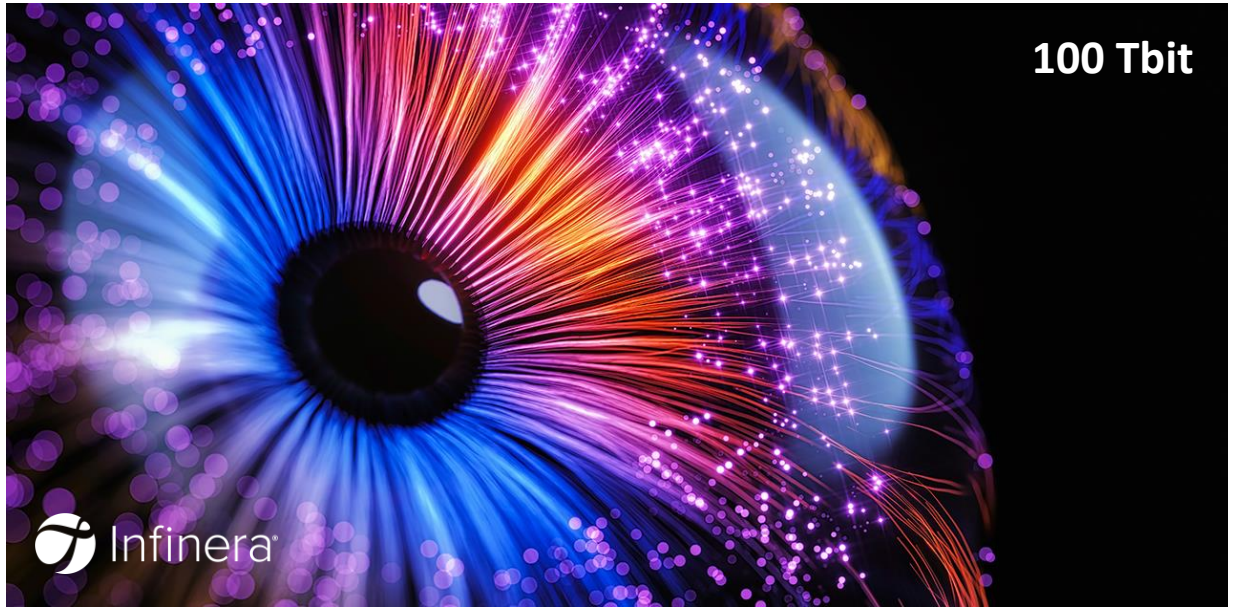

Summary

Optische Übertragungstechnik wird bedeutender. Endlich !

1. **Glasfasernetze gewinnen immer mehr an Relevanz**
2. **Übertragungsbandbreite von 100Tbit auf einem Faserpaar realisierbar**
3. **XR kohärente Technik ermöglicht Punkt zu Multipunkt**
4. **XR kohärente Technik ermöglicht Single-Fiber Übertragung**
5. **Entwicklung zu niedrigeren Watt/Gbit geht weiter**

© 2023 Infinera. All rights reserved. Company Confidential.

Infinera®

Thank You